Volume II
H 30 M983

H

H30	Footbrake Camshaft
H31	Footbrake Camshaft Lever
H38	Handbrake Camshaft Lever
H39	Handbrake Camshaft R.H.
H40	Handbrake Camshaft L.H.
H41	Starting Handle Bracket (on frame)
H43	Pin (self starter strap anchorage)
H54	Brake Shaft Lever
H60	Bottom Water Fitting
H61	Radiator Stay Rod Bracket
H62	Radiator Filler
H63	Filler Cap
H64	Top for Filler Cap
H70	1st Reduction Pinion
H72	Clutch Cross Shaft
H73	Radiator Filter Collar
H74	Radiator Filter Bottom
H75	Radiator Filter Gauze
H92	B/B Cage Steering Column Support
H93	Gap for B/B cage
H94	Radiator Stay Rod
H98	Steering Column Support B/B
H103	? on Layshaft
H104	1st Reduction Wheel on Layshaft
H112	Stud for Sub-frame Suspension Bracket
H113	Distance Piece (for rear spring bracket)
H126	Main Bearing (short)
H131	Hinge Channel
H132	? Bonnet Hinge
H133	Top Rod for Bonnet Hinge
H134	Bonnet Hinge Pin
H136	Bonnet Side Hinge
H145	Bush for Diff. Cage
H146	Planet Pinion Washer
H154	? Driving Flange
H155	Stuffing Box
H156	Stuffing Box Gland
H163	Rear Hub Driving Doc
H164	Driving Dog Pegs
H172	Rear Spring Plate
H173	Rear Spring Bolt
H176	Bevel Pinion B/B Cage
H178	Thrust Washer
H181	CAV Lighting Switchboard
H183	Instrument Board Lighter
H188	G-- Rear Body Panel Guard

H197	Hood Iron Sleeve
H198	Hood Pivot Pin
H199	Rear Spring Packing Piece
H200	Rear Spring Packing Piece
H203	Front Spring (offside)
H204	Rear Spring
H218	Brake Rod
H227	?-- Tank Piece
H233	Change Speed Shaft
H234	Change Speed Box Wedge
H235	Change Speed Shaft Tube
H244	Clutch Spring
H245	Change Speed Box Wedge
H256	Petrol Tank Support Cap
H257	Petrol Tank Support
H269	Carburetter Sliding Tube
H293	Petrol Tank (capacity 11 gallons)
H294	Petrol Feed Pipe
H306	Air Relief Valve Seat
H327	Handbrake Lever Shaft
H336	Silencer Tube
H338	Silencer Outer Shell
H340	Exhaust Pipe Stay
H347	Exhaust Pipe - Engine to Silencer
H348	Exhaust Pipe from Silencer
H357	? Spring Centre Bolt
H358	? Spring Centre Bolt
H370	Frame Plate Front
H371	Frame Plate Rear
H402	Universal Joint Dust Cover
H412	Strap for Battery Box
H413	Bracket for Self Starter Foot Switch
H415	Top End Bonnet Hinge (Female)
H416	Top Bonnet Hinge
H420	Control Rod
H434	Oil and Air Pressure Gauge Flange
H438	Strap End
H446	Water Heater Outlet Pipe
H462	Hand Air Pump Pipe
H471	Air Gauge Pipe
H472	Oil Gauge Pipe
H474	Lighting Wire Bush
H479	Luggage Carrier - Front Half Lt. Hd.
H482	Dashboard Support - Lt. Hd.
H483	Dashboard Support - Rt. Hd.
H487	Cable Clip
H488	Cable Clip
H516	Luggage Carrier - Rear Half
H536	Silencer Supporting Saddle
H554	Clutch Peal Lever
H556	Speedometer Bracket (Frame)
H577	Starting Handle Bracket
H581	Dynamo Table
H583	Bracket for Foot Switch

H586	Packing Piece for Cross Tube
H587	Packing Piece for Cross Tube
H592	Lamp Bracket - LH
H593	Lamp Bracket - RH
H596	Luggage Carrier - Rear Half
H597	Luggage Carrier - Front Half Rt. Hd.
H610	Felt Packing for Radiator
H636	Air Pressure Gauge
H637	Horn Switch and Connections
H643	Lead Hammer
H652	Top Bracket for Wheel Carrier Support
H653	Bottom Bracket for Wheel Carrier Support
H654	Screwed End for Wheel Carrier Tube
H658	Oil Pressure Gauge
H659	Radiator Badge
H661	Screwed End for Wheel Carrier Tube
H664	U Bolt
H665	Packing Piece for Spare Wheel Carrier
H675	Wheel Stop
H678	Locking Ring for Spare Wheel Carrier
H679	Locking Nut for Spare Wheel Carrier
H693	Speedometer Pulley (on universal joint casing)
H698	Saddle Piece
H699	Saddle Piece
H704	Packing Plate for Shock Absorber
H718	Cap for Exhaust Pipe Stay
H731	Differential Sun Bevel Wheel
H732	Lock nut for Sun Bevel Wheel
H744	Differential Cage (Spigot)
H757	Stiffening Plate for Wing Stays
H758	Plate for Ball End L.H.
H768	1st Reduction Pinion Flange
H787	Reverse Gate Stop Rod
H799	Torque Suspension Fork Stop
H850	Spring Washer
H851	Dynamo Pulley
H855	Instrument Board
H856	Hanger for Front No. Plate
H857	Hanger for Back No. Plate
H860	Change Speed Hand Lever
H861	1st Reduction Pinion Flange
H893	Top Joint
H895	Steering Column Support Distance Piece
H899	Hood Bracket
H934	Magneto Switch
H950	Propeller Shaft
H951	Thrust Ring - Inner (Steering Box)
H973	Control Spring Bracket

L

L38	Steering Worm Packing Washer
L39	Steering Worm Wheel Packing Washer
L46	?
L65	Brake Camshaft Washer
L84	Main Bearing Cap

L88	Gearbox Packing Gland Back
L89	Gearbox Packing Gland Front
L90	Back Axle Packing Gland
L96	Eccentric Strap
L132	Terminal for Low Tension Wire
L154	Oil Tell Tale Guide
L212	Packing Washer
L213	Packing Washer Also D344/5/6
L214	Packing Washer
L241	Collar Stud
L258	Clutch - Outer Member
L350	Packing Washer for Spring Horn
L351	Packing Washer for Spring Horn
L352	Packing Washer for Spring Horn
L353	Packing Washer for Spring Horn
L365	Universal Star Joint Pin
L371	Camshaft Back Bearing Feed Pipe
L387	Washer for Y 10
L400	Universal Joint Cover
L404	Oil Regulator
L406	Spanner for Clutch Locking Ring
L417	Tie Bar
L418	Chassis Diagram Instruction Plate
L428	Timing Chain Oiler
L429	3/8" Gas Plug
L557	Clutch Instruction Plate
L840	Magneto Table
L846	Pin for Bonnet Fastener Handle
L847	Leather for Footbrake Operating Lever
L849	Pin for Connecting Link
L850	Badge ?
L886	Pin for Socket Footbrake
L892	Pin for Propeller Shaft
L894	Main Bearing Cap (Centre)
L959	Crankcase Door Front
L991	End for Carb: Sliding Tube

M

M118	Attachment Plate for N° 3 Hood Stick
M398	Stop Collar (Valve)
M402	Float Chamber
M423	1st Reduction Pinion Flange
M424	Clutch Coupling Flange
M696	Stud for Rocker Spindle
M827	Hood Iron Bracket N.S.
M877	Shock Absorber Ball End Front
M896	Side Steering Tube
M900	Roller for Accelerator Pedal Lever
M901	Pin for M900
M982	Clutch Shaft
M983	Dynamo Pulley

H30

M/c. all over.

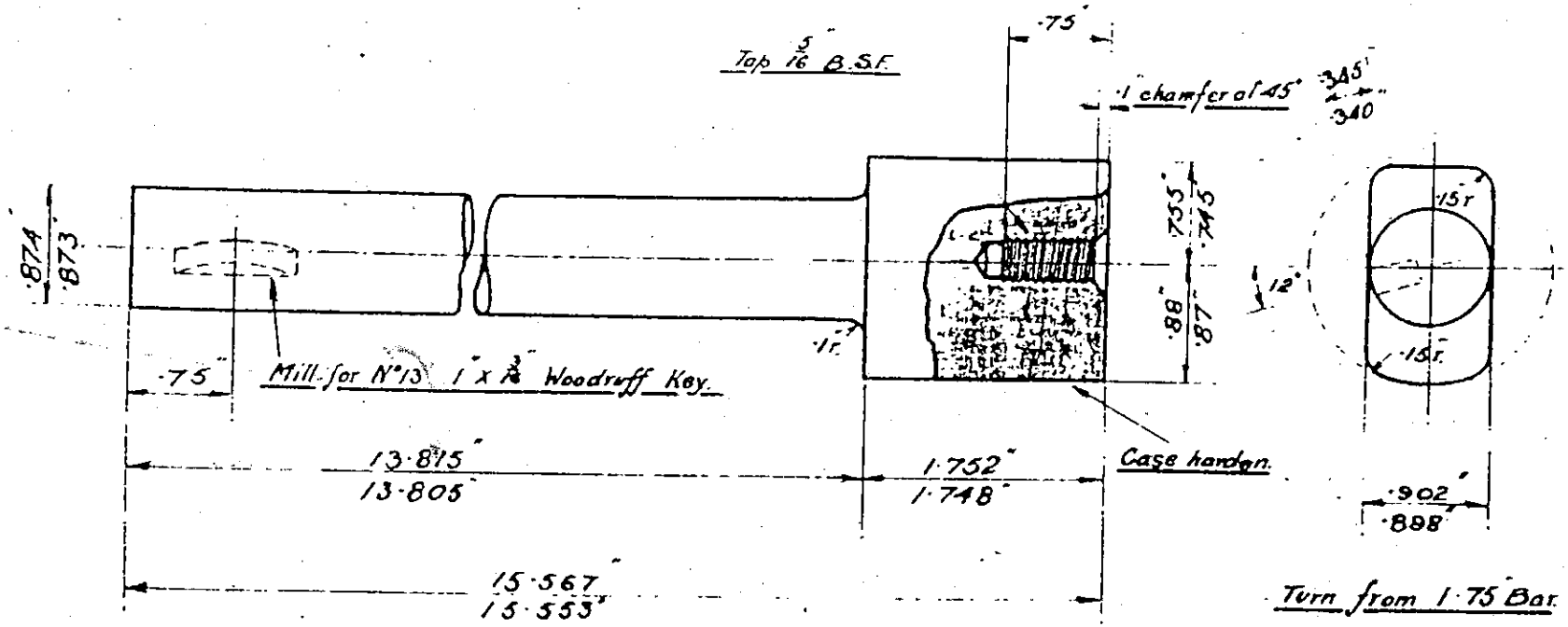

DRAWING Nº. 57—S	
MATERIAL. C.H.M.S.	
HEAT TREATMENT. F(W)	

FOOTBRAKE CAMSHAFT

DRAWN BY	R.W.
TRACED BY	R.G.T.
CHECKED BY	
PASSED BY	
DATE 27·11·18.	

V5175 H31

AL. FORG. Y.

n/c where marked f.

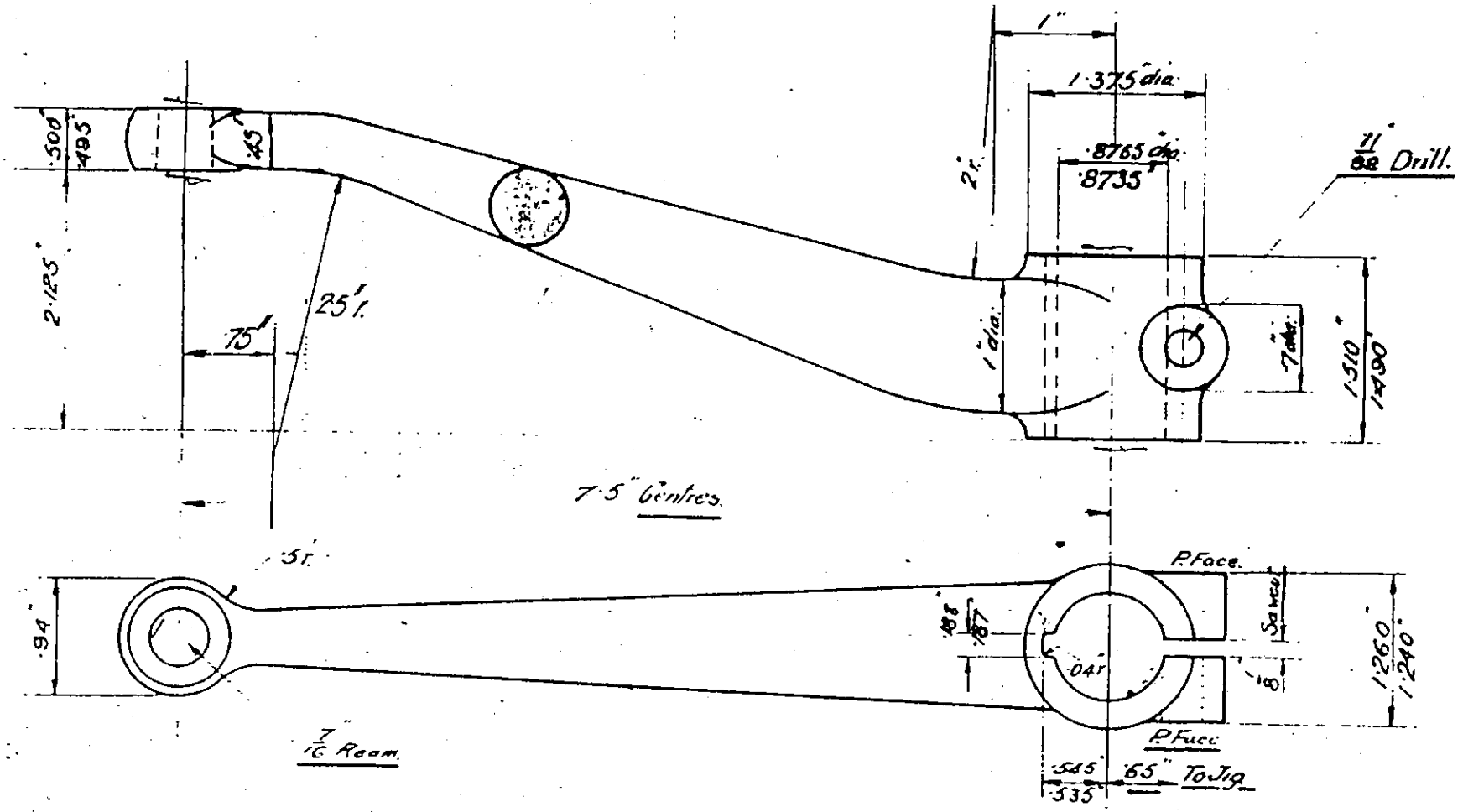

DRAWING No.	57—S
MATERIAL	H. T.S. 40C. Stpg
HEAT TREATMENT.	A2.

FOOTBRAKE CAMSHAFT LEVER

DRAWN BY	R.G.T.
TRACED BY	[illegible]
CHECKED BY	[illegible]
PASSED BY	[illegible]
DATE	27·11·18.

H 38

Mc where marked f

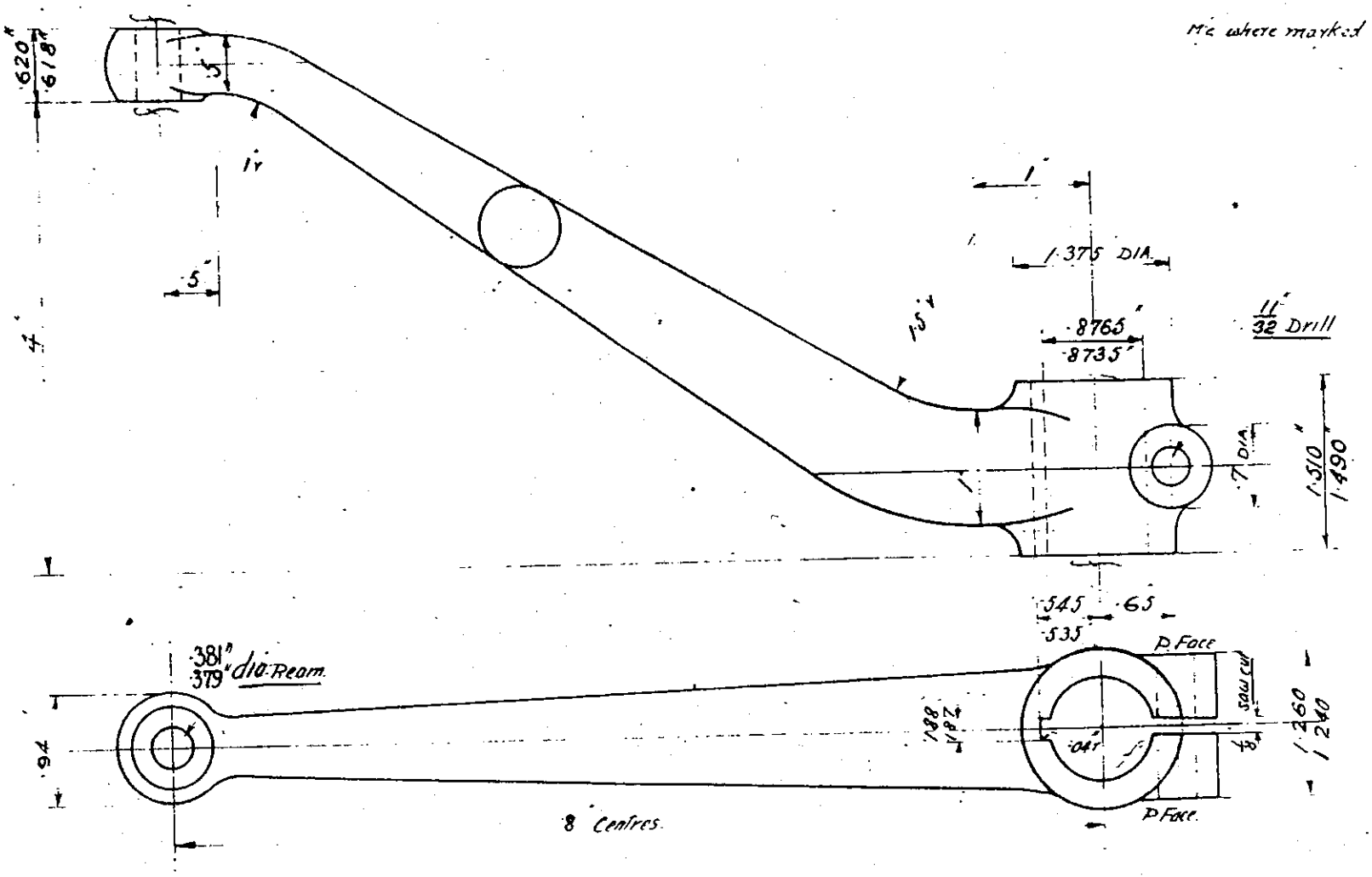

DRAWING No. 61 — S

MATERIAL H.T.S. 40 C. S/P.G.

HEAT TREATMENT. A2.

HANDBRAKE CAMSHAFT LEVER

DRAWN BY	A.H.
TRACED BY	M.B.
CHECKED BY	A.H.
PASSED BY	A
DATE 5.11.18	

H 39

M/c All Over

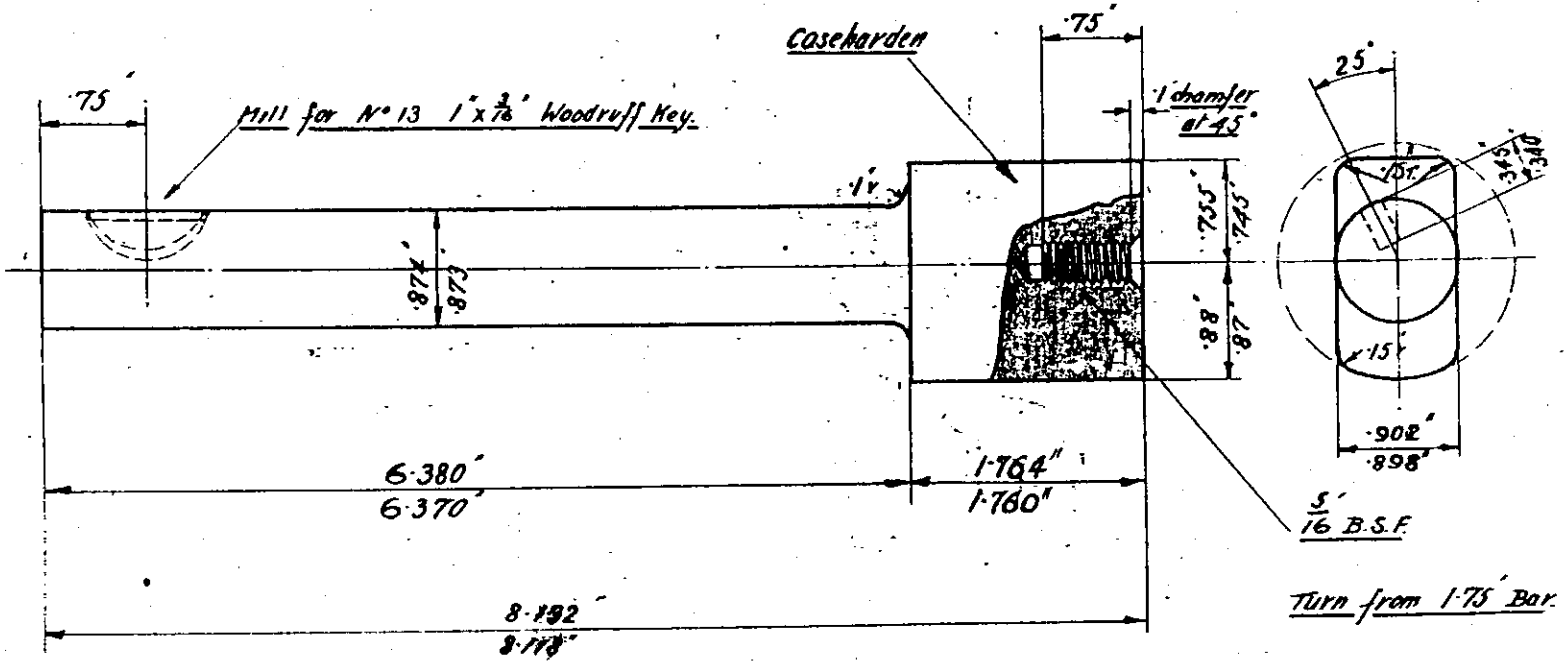

Turn from 1.75" Bar.

DRAWING N°. 60—S

MATERIAL. C. H. M. S.

HEAT TREATMENT. F.W.

HANDBRAKE CAMSHAFT R.H.

DRAWN BY	[illegible]
TRACED BY	H.B.
CHECKED BY	[illegible]
PASSED BY	[illegible]
DATE 4.11.18.	

H40

M/c All Over.

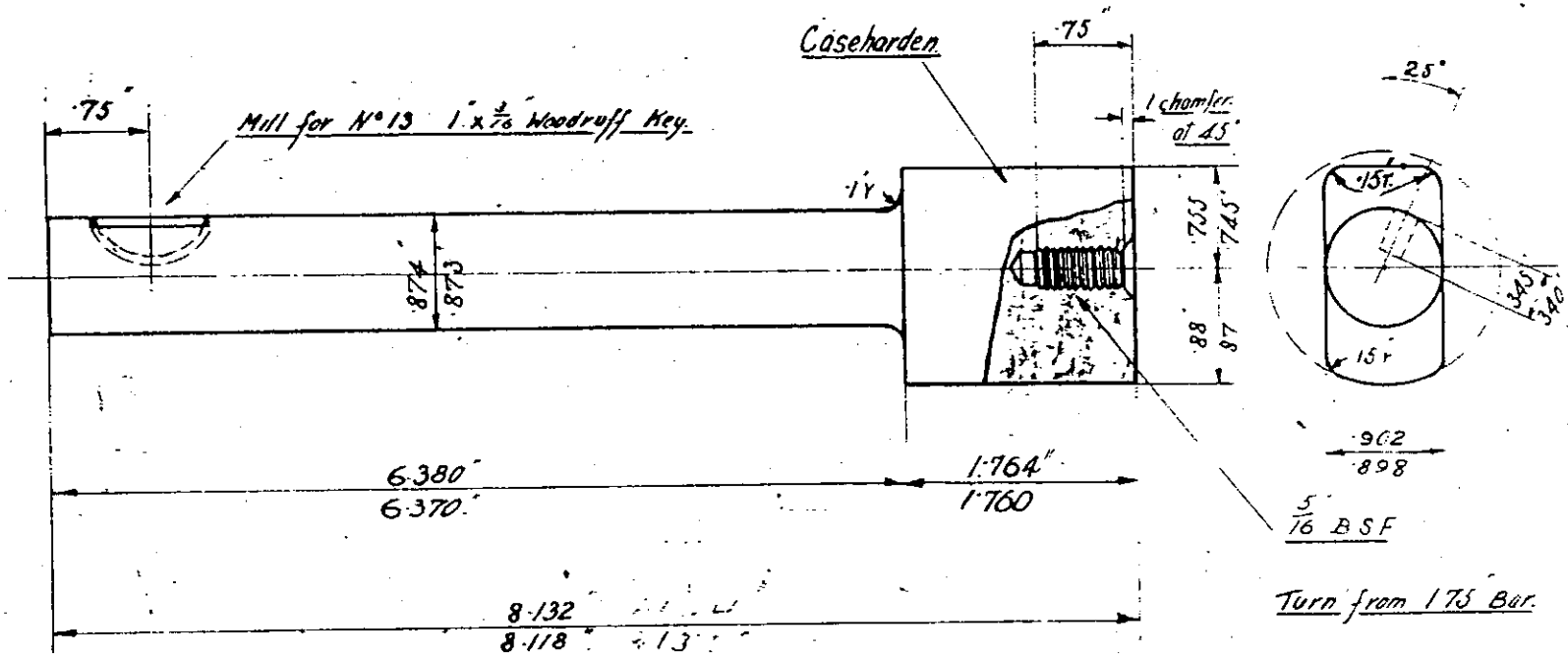

DRAWING No. 60-6	HANDBRAKE CAMSHAFT L.H.	DRAWN BY	[illegible]
MATERIAL C.H.M.S.		TRACED BY	M.B.
HEAT TREATMENT F.W.		CHECKED BY	[illegible]
		PASSED BY	[illegible]
		DATE 4. 11. 18.	

H4H

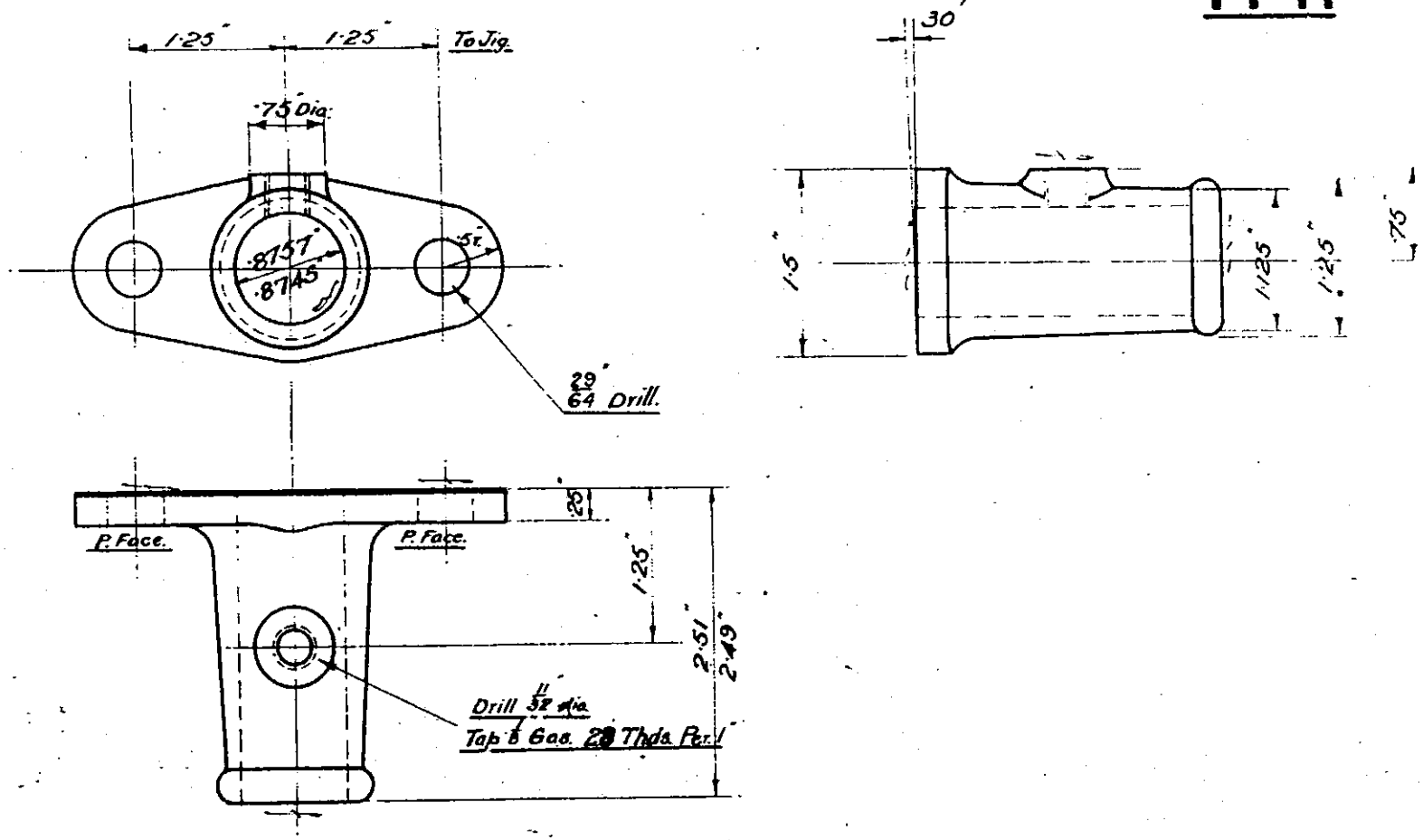

DRAWING Nº. 62-8	STARTING HANDLE BRACKET (ON FRAME)	DRAWN BY	R.W.
MATERIAL M.I.		TRACED BY	R.G.T.
HEAT TREATMENT		CHECKED BY	
		PASSED BY	
		DATE 29·11·18	

H 43

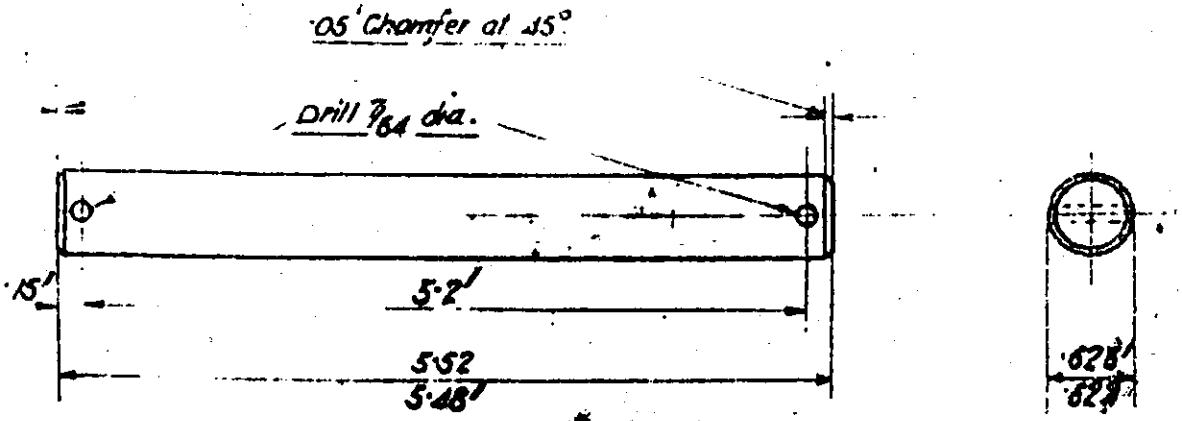

424

[illegible] No. [illegible]-8.	PIN (SELF STARTER STRAP ANCHORAGE)	DR. BY
[illegible]		CHECKED
[illegible]		PASSED
[illegible]		DATE

V 5646 H54

AL. FORG. Y.

M/c where marked

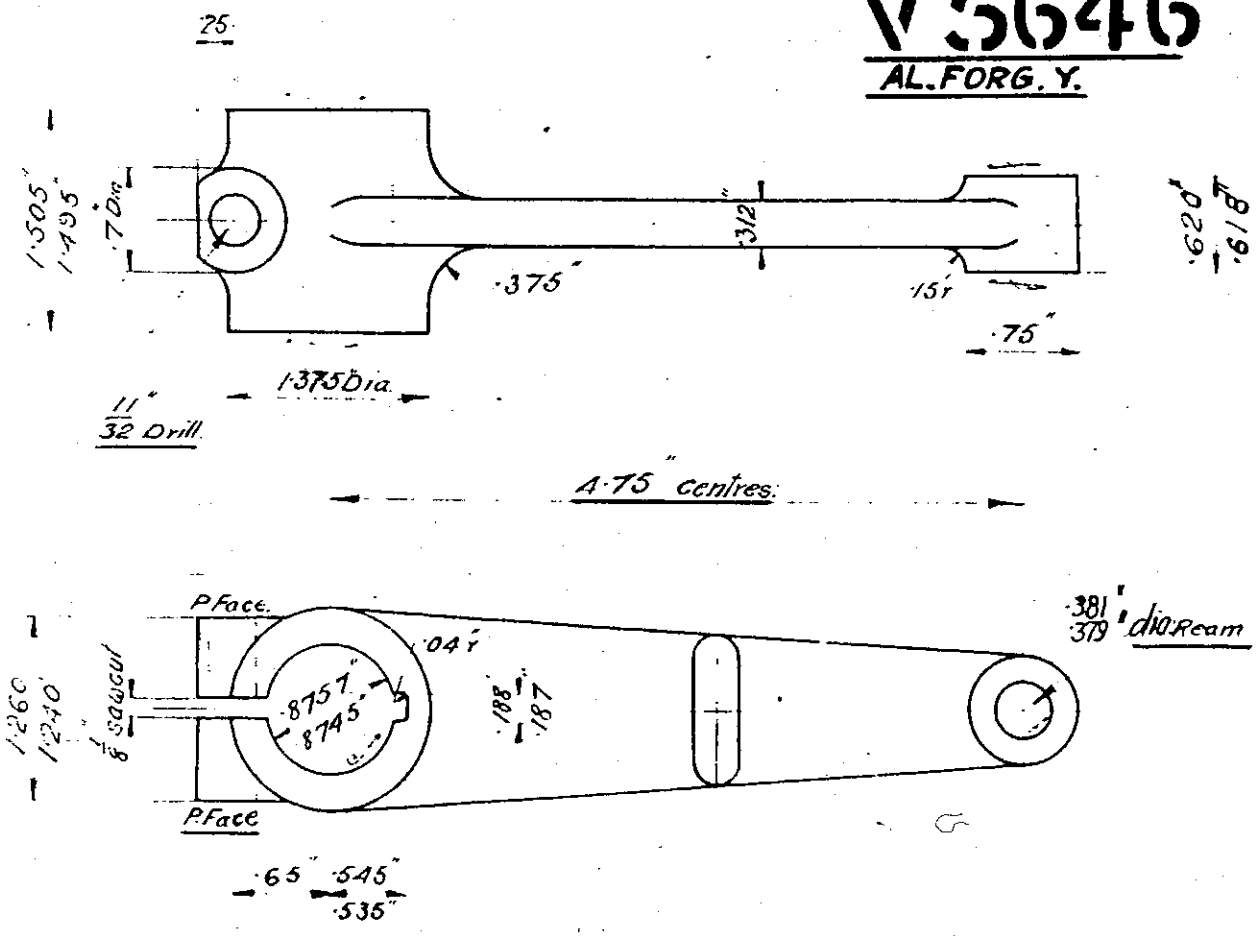

DRAWING No. 66 — S	BRAKE SHAFT LEVER	DRAWN BY	
MATERIAL H.T.S. 40 C. Stpg		TRACED BY	R.L.T.
HEAT TREATMENT C		CHECKED BY	
		PASSED BY	
		DATE 21·11·18	

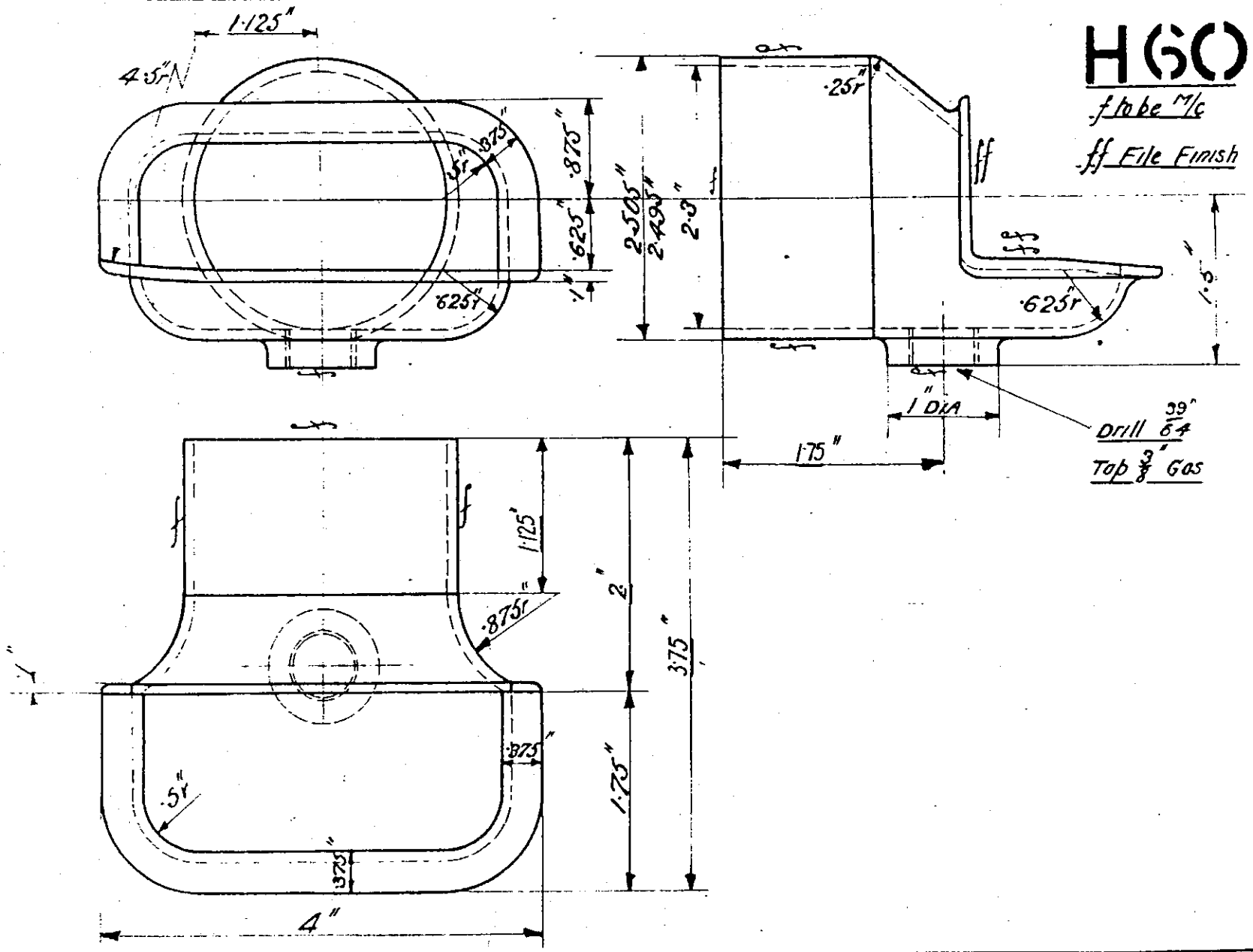

HGO

f tobe M/c

ff File Finish

DRAWING No. 45-S	DRAWN BY
MATERIAL. GM CASTG	TRACED BY S.H.H
HEAT TREATMENT.	CHECKED BY
	PASSED BY
	DATE 3·12·18

BOTTOM WATER FITTING

H61

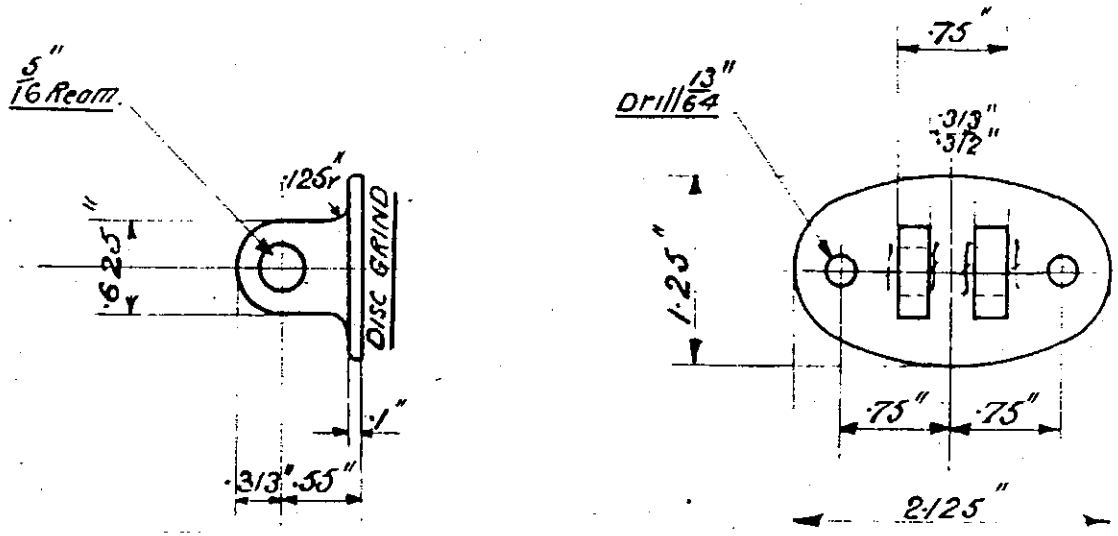

DRAWING No. 4S - S	RADIATOR STAY ROD BRACKET	DRAWN BY	Rh
MATERIAL C.M CASTC.		TRACED BY	S.H.H
HEAT TREATMENT.		CHECKED BY	Rh
		PASSED BY	[illegible]
		DATE 3 · 12 · 18	

V 6480 H62

2·312" Thread Dia: 2·375" Thread Dia:

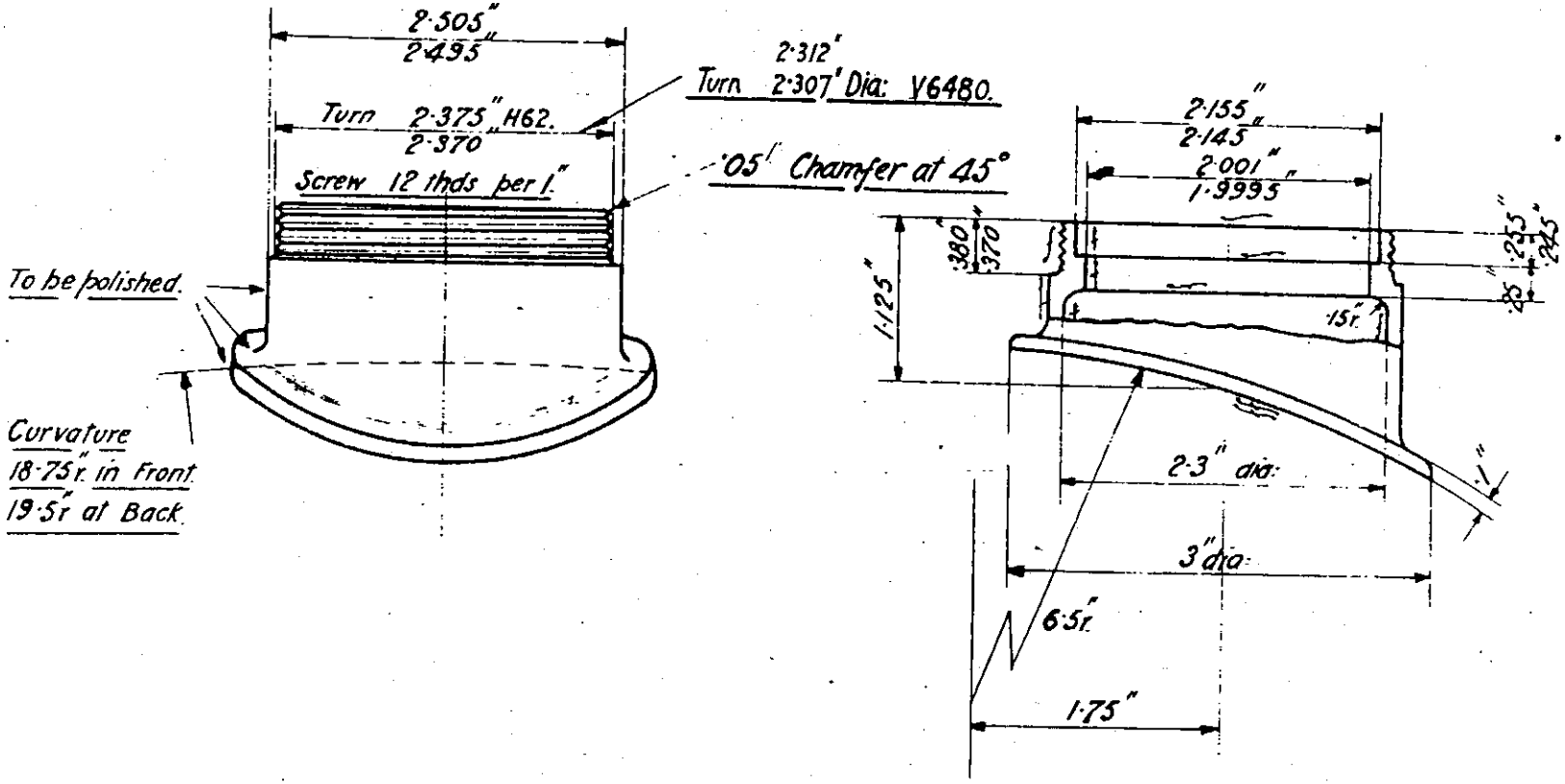

DRAWING No. 49 - S

MATERIAL. C.M.CAST.

HEAT TREATMENT.

RADIATOR FILLER

DRAWN BY	R.W.
TRACED BY	S.H.
CHECKED BY	
PASSED BY	
DATE 3 - 12 - 18	

V 6481

2·312" Thread Dia.

H63

2·375" Thread Dia.

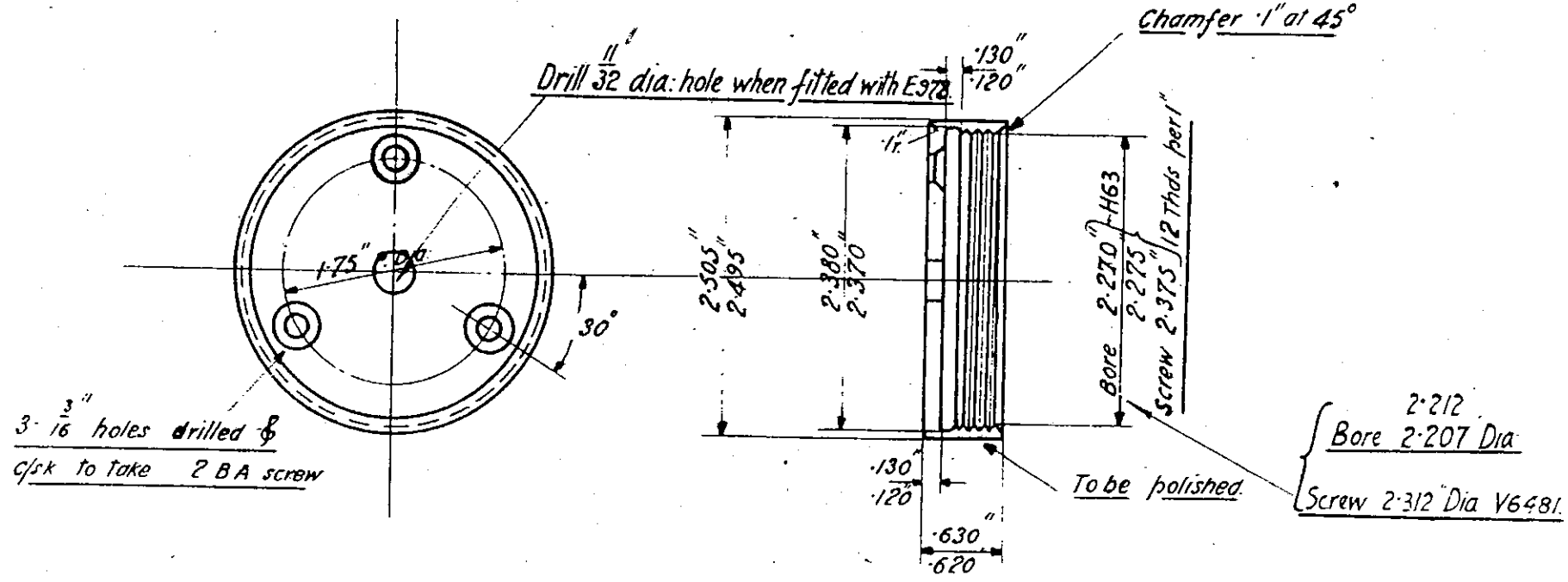

DRAWING No. 49 - S	
MATERIAL CMCAST.	FILLER CAP
HEAT TREATMENT	

DRAWN BY	R.W.
TRACED BY	S.H.
CHECKED BY	
PASSED BY	
DATE 3 - 12 - 18	

H 64

M/c all over

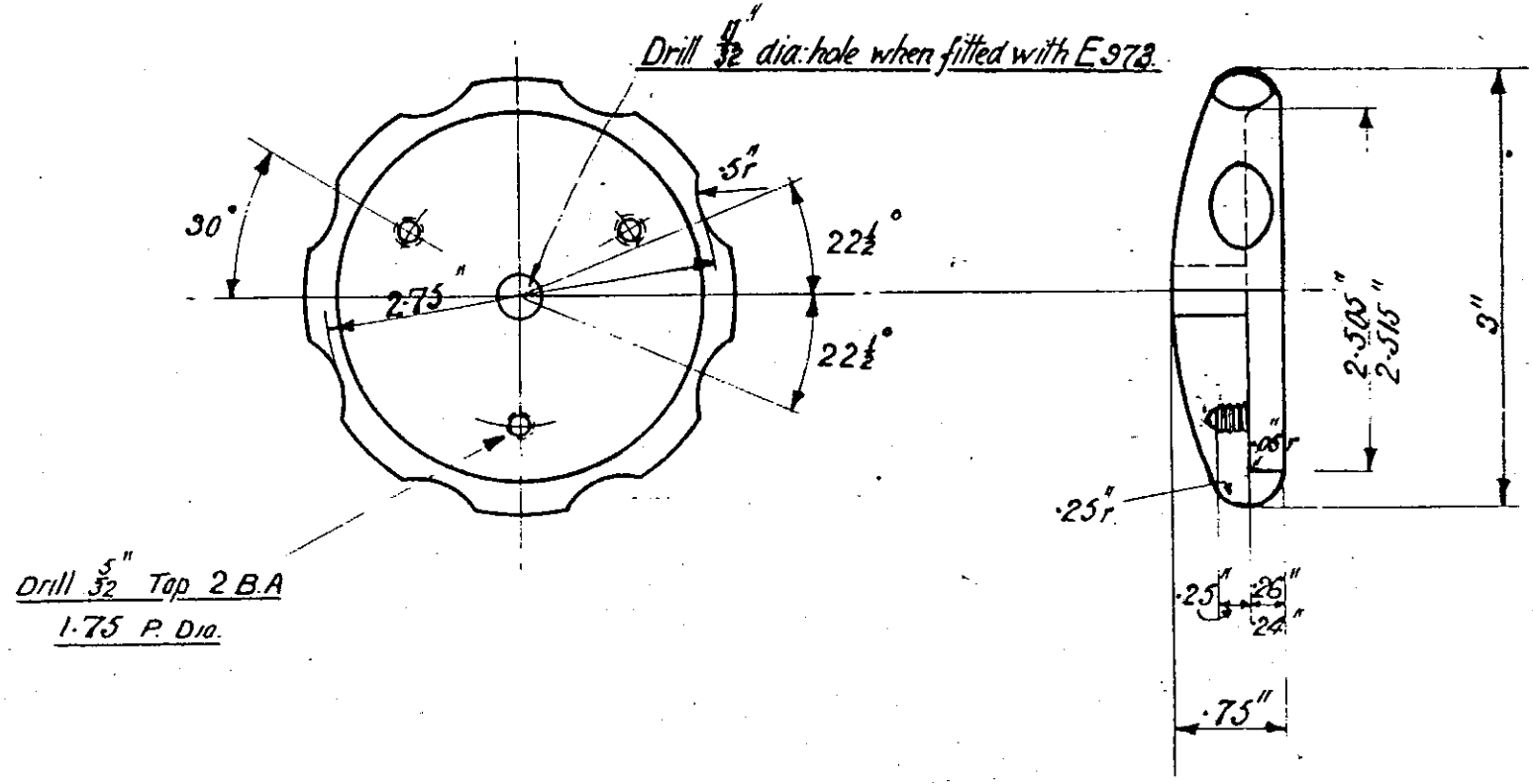

DRAWING No. 50-S	
MATERIAL. EBONITE	
HEAT TREATMENT.	

TOP FOR FILLER CAP

DRAWN BY	[illegible]
TRACED BY	S.H.H
CHECKED BY	[illegible]
PASSED BY	[illegible]
DATE 4·12·18	

H70

Mic all over

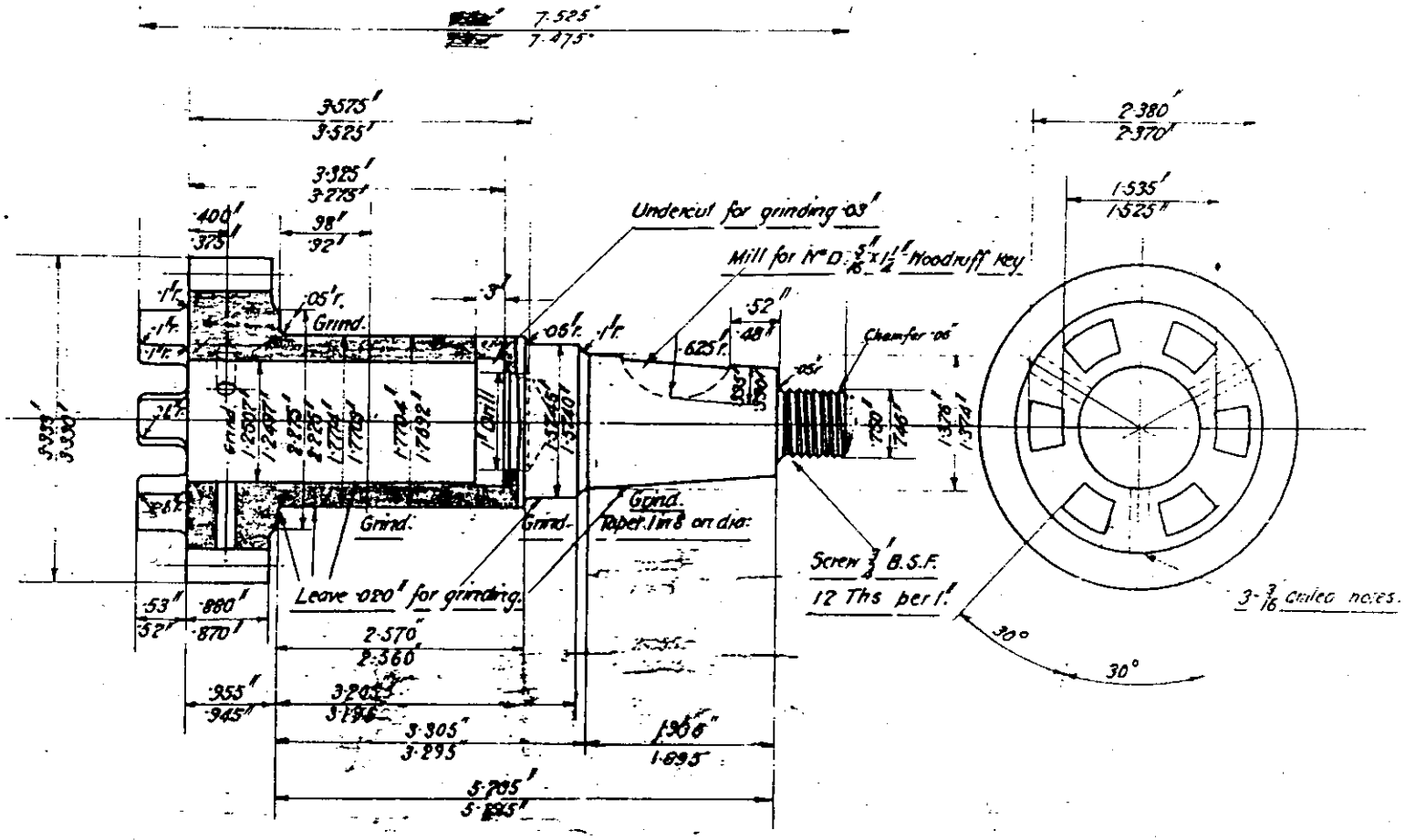

Diametral Pitch.	6
No of Teeth.	18
Pitch Diameter.	3"
Pressure Angle	14½°
Q x f	.3595"
f	.2618"

DRAWING No. 53-4.

MATERIAL. CHNS. STP.

HEAT TREATMENT.

1st REDUCTION PINION.

DRAWN BY	S.H.H.
TRACED BY	
CHECKED BY	
PASSED BY	
DATE	22-10-18.

H72

M/C where marked "f"

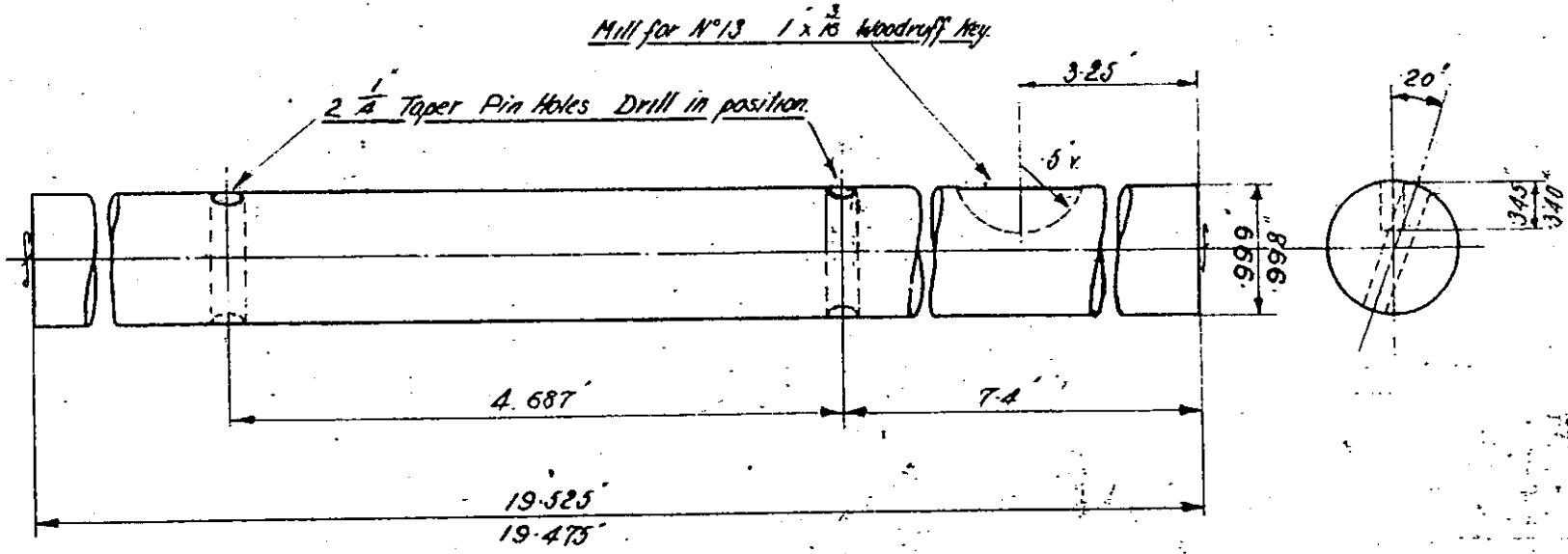

DRAWING No. 59-S	OD	DRAWN BY	R.W.
MATERIAL B.D.S.	CLUTCH CROSS SHAFT	TRACED BY	M.B.
HEAT TREATMENT		CHECKED BY	[illegible]
		PASSED BY	[illegible]
		DATE 6.12.18	

H73

M/c All Over

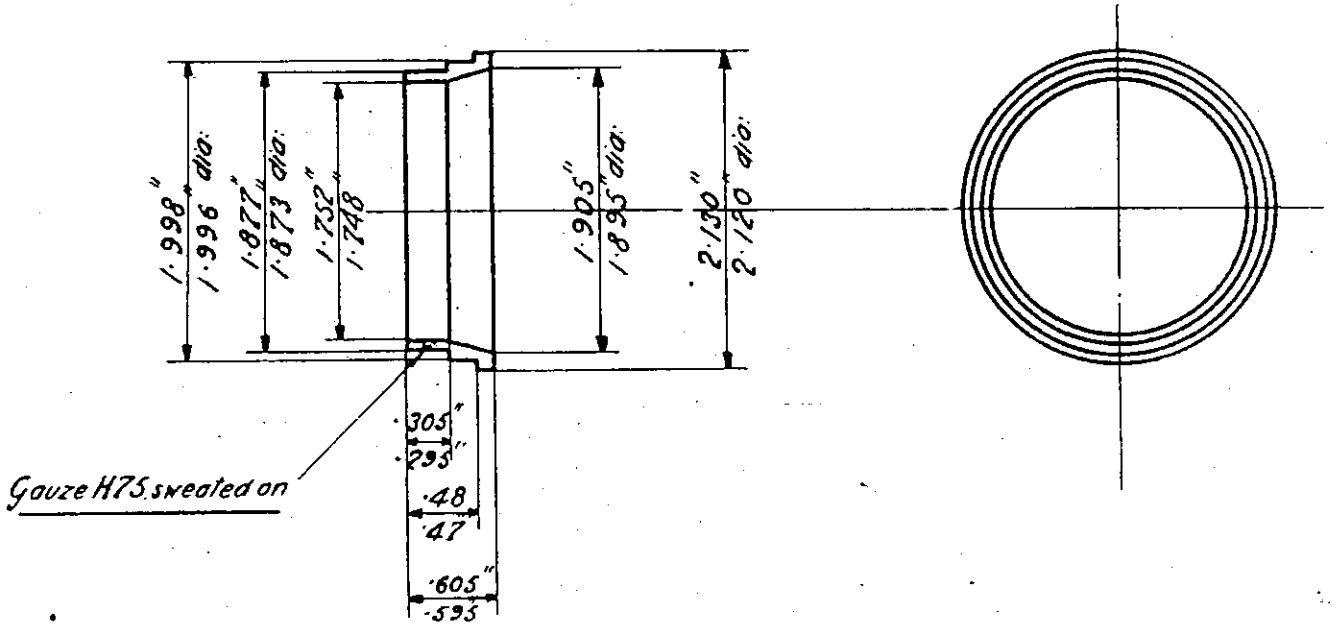

DRAWING No. 47 - S	DRAWN BY RW
MATERIAL. BR. TUBE.	TRACED BY SH
HEAT TREATMENT.	CHECKED BY
	PASSED BY
	DATE 6 12 16

RADIATOR FILTER COLLAR

H74

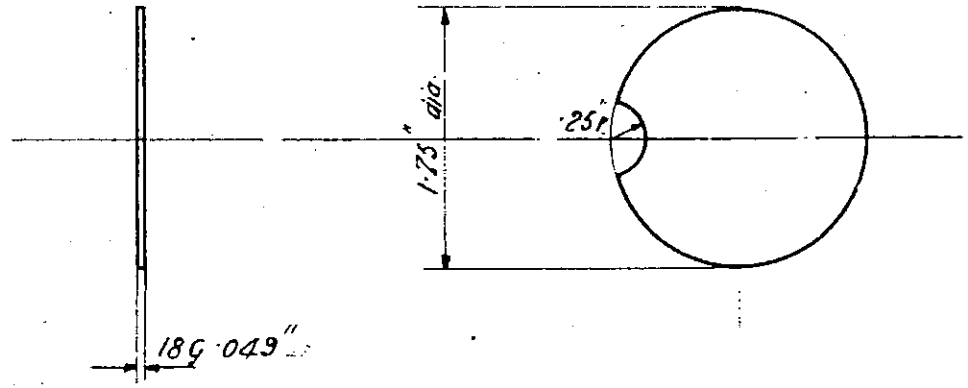

DRAWING Nº 47 - S	
MATERIAL SH BRASS.	
HEAT TREATMENT.	

RADIATOR FILTER BOTTOM

DRAWN BY	R.W.
TRACED BY	S.H.
CHECKED BY	
PASSED BY	
DATE 6 - 12 - 18.	

H75

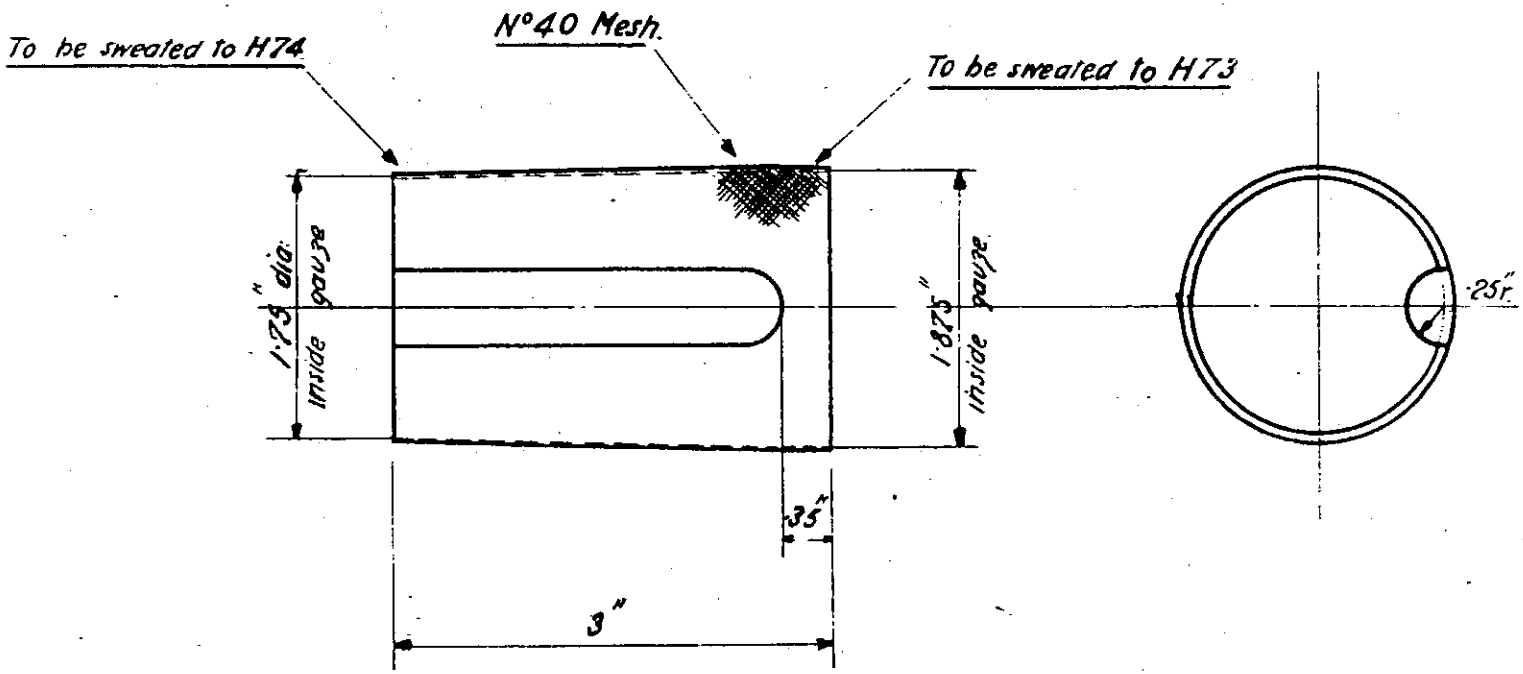

DRAWING N°50 - S	RADIATOR FILTER GAUZE	DRAWN BY	R.W.
MATERIAL BR GAUZE		TRACED BY	S.H.
HEAT TREATMENT		CHECKED BY	
		PASSED BY	[illegible]
		DATE 6 - 12 - 18	

H92

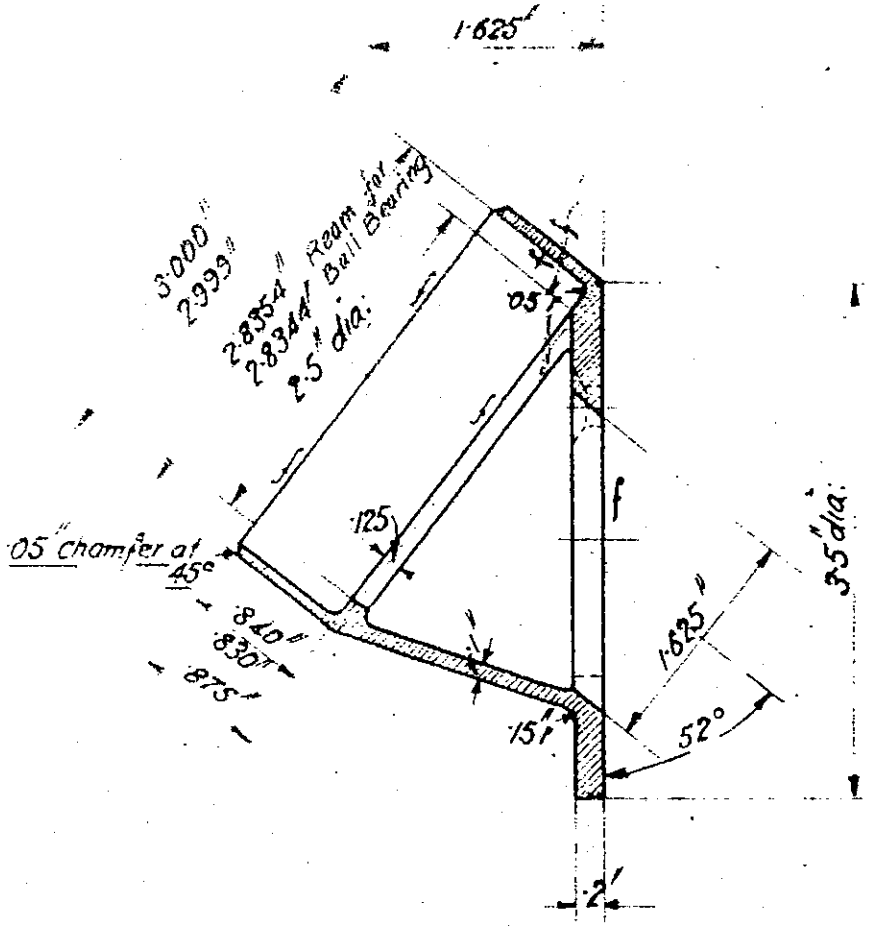

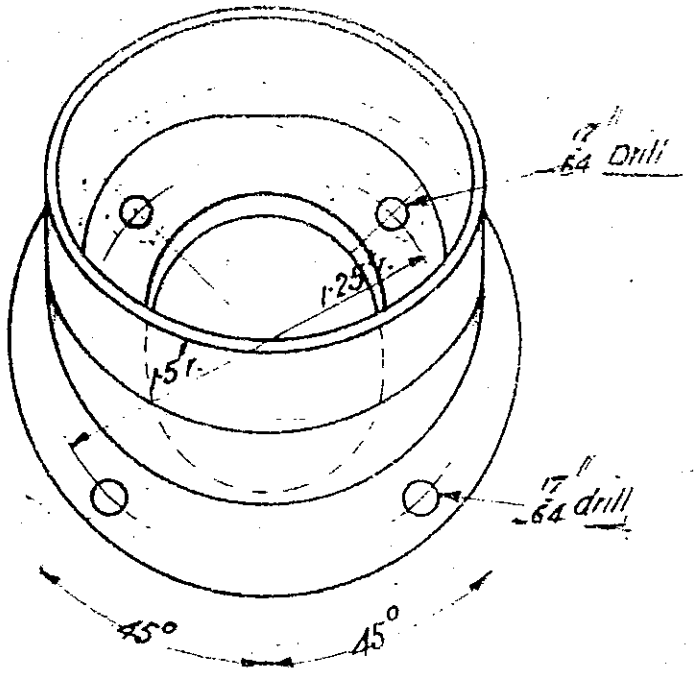

DRAWING Nº 2668.	B/B CAGE STEERING COLUMN SUPPORT
MATERIAL: C.M.CAST	
HEAT TREATMENT.	

DRAWN BY	
TRACED BY	
CHECKED BY	
PASSED BY	
DATE 13-12-18.	

H93

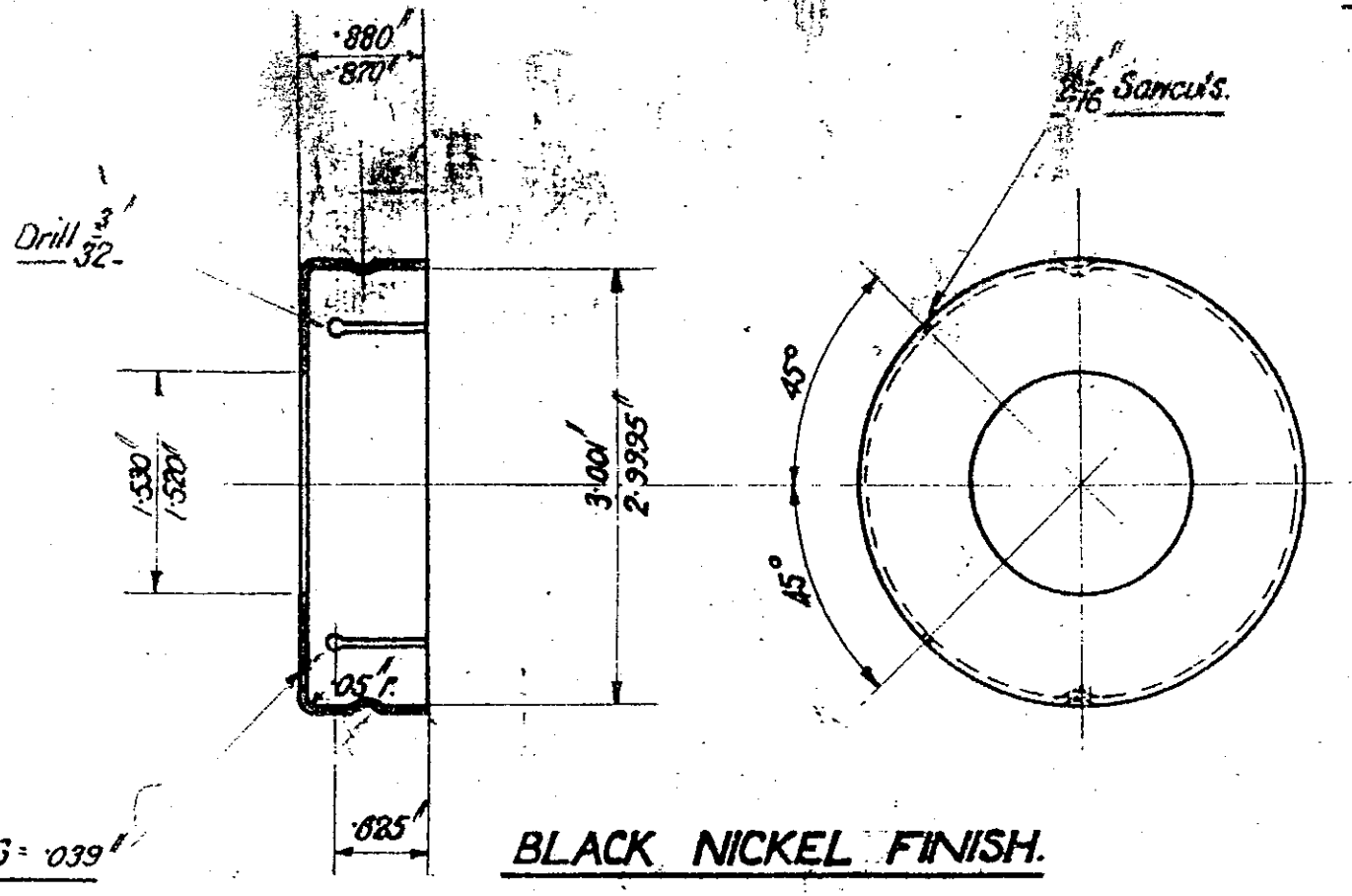

BLACK NICKEL FINISH.

DRAWING No. 266-8.	CAP FOR B/B CAGE.	DRAWN BY
MATERIAL TEPRES.		TRACED BY
HEAT TREATMENT.		CHECKED BY
		PASSED BY
		DATE 1-1-19

H94

M/C Where marked "f"

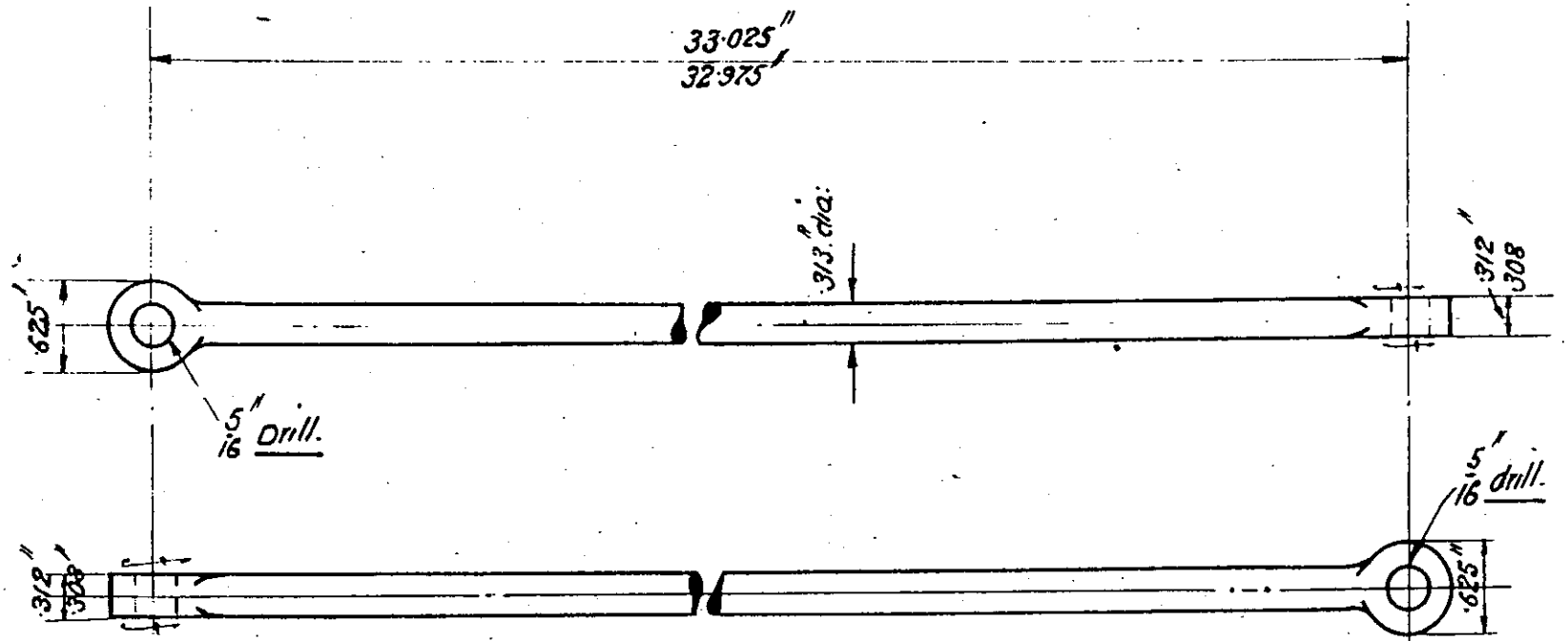

Length before Forging = 3'-1"

DRAWING Nº.	158-8.
MATERIAL	BDS

RADIATOR STAY ROD

DRAWN BY	lf
TRACED BY	lf
CHECKED BY	RHC

H9S

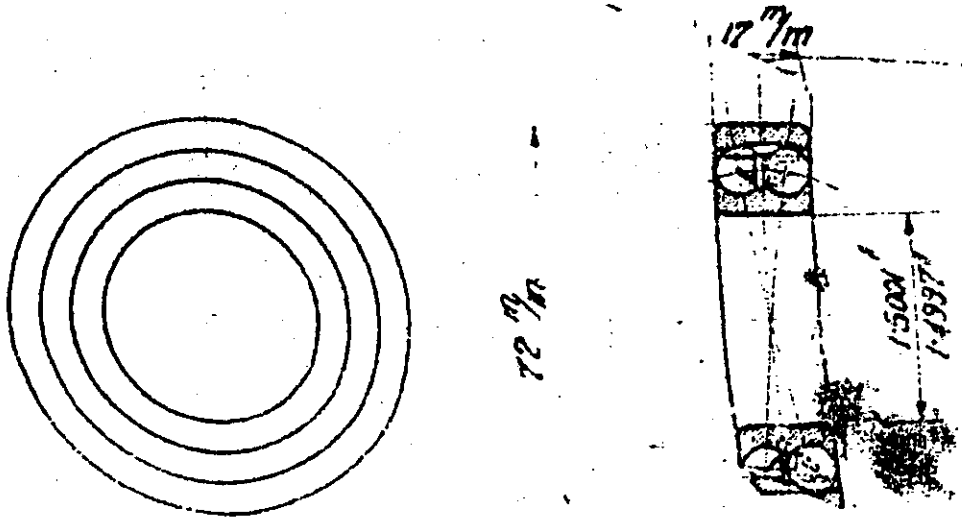

MADE FROM SKF No 1207.

275

DRAWING No. 275-B.	STEERING COLUMN SUPPORT B/B	DRAWN BY
MATERIAL.		TRACED BY
TREATMENT.		CHECKED BY
		PASSED BY

H103

M/C All over

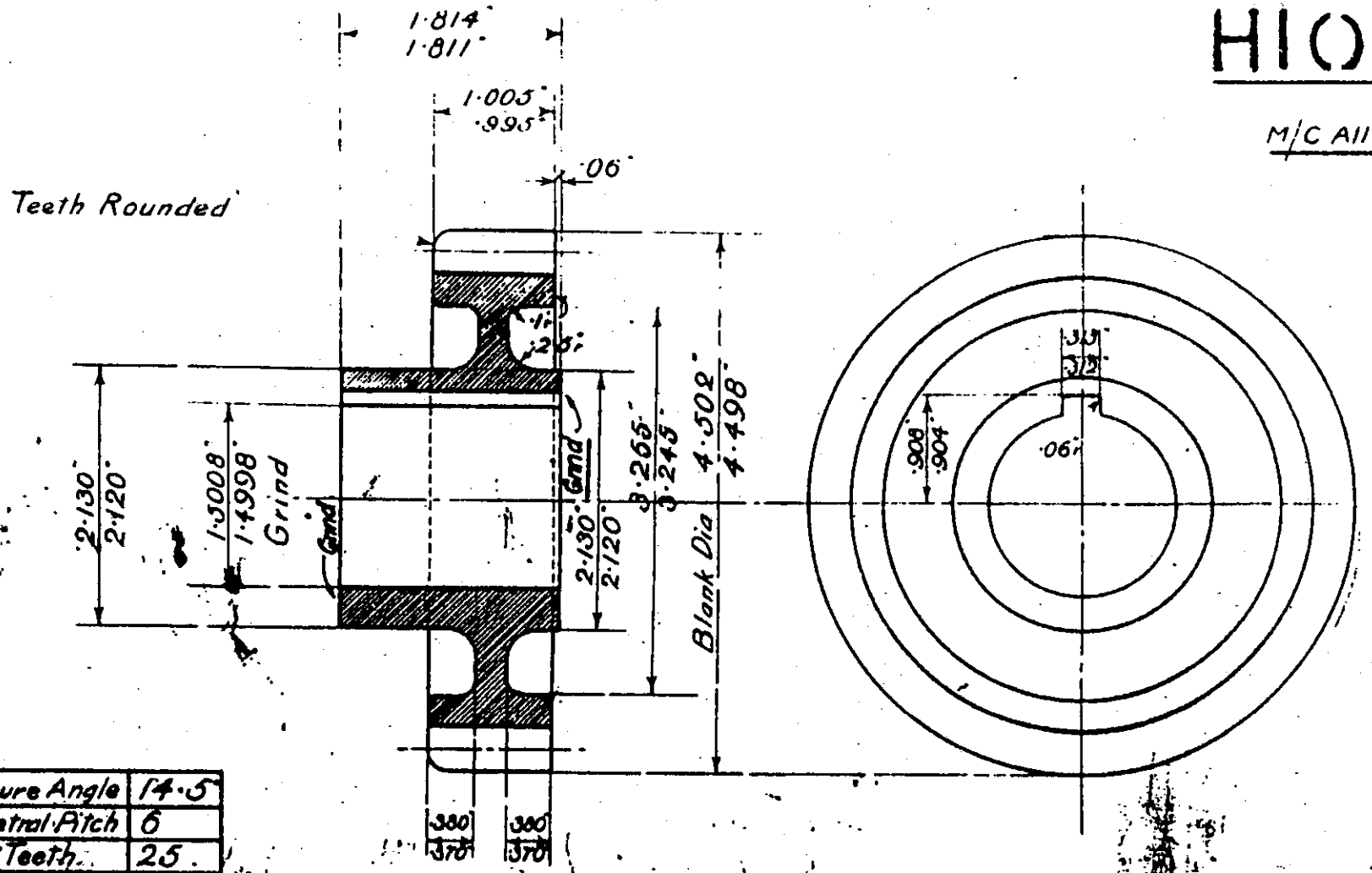

Pressure Angle	14·5
Diametral Pitch	6
No. of Teeth	25
Pitch Diameter	4·166
D.P.	[illegible]
	0·2618

ON LAYSHAF

H104

M/C All over

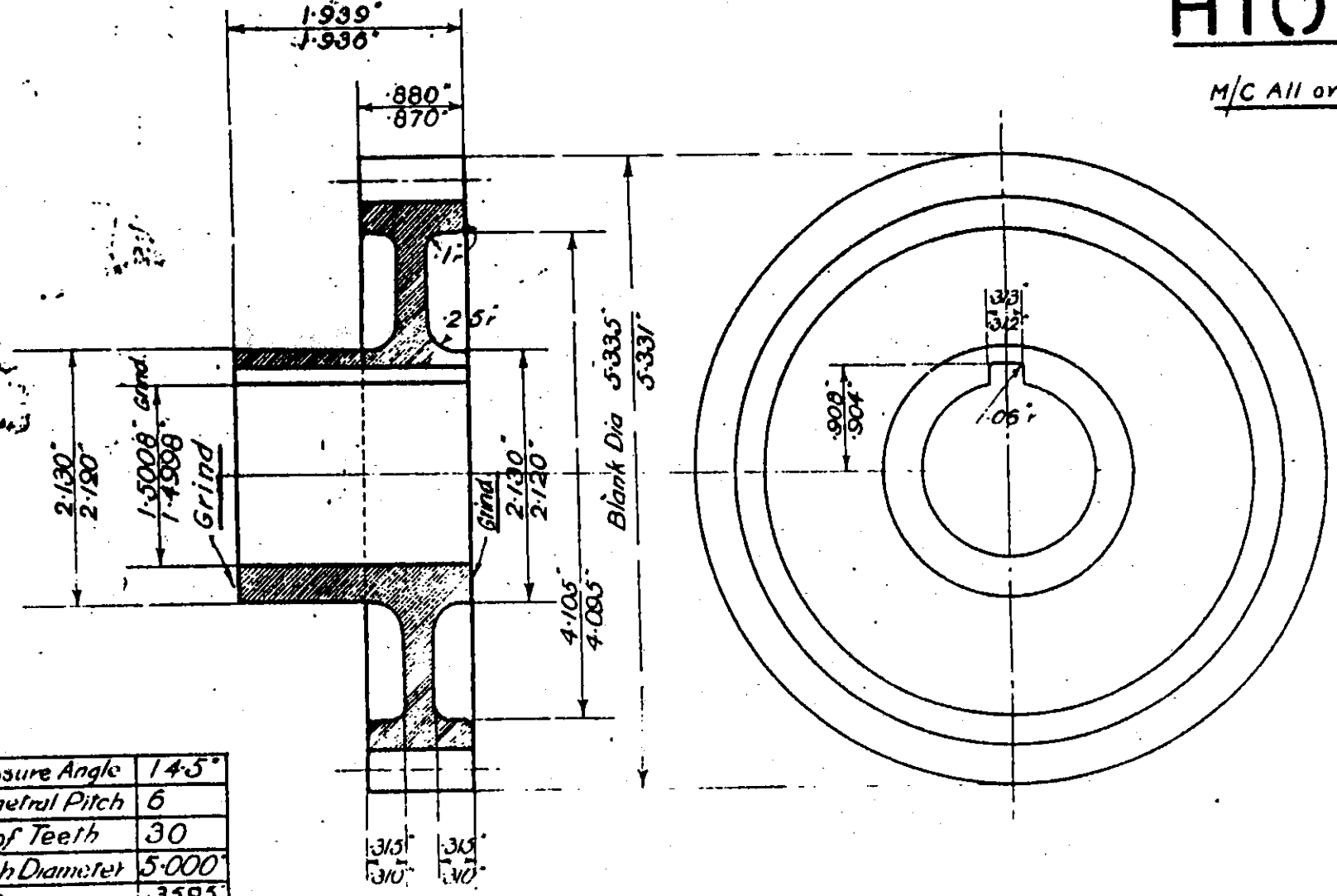

Pressure Angle	14·5°
Diametral Pitch	6
N° of Teeth	30
Pitch Diameter	5·000"
D ℄	·3595"
r	0·2618"

DRAWING Nº. 276-S

MATERIAL C.H.N.S.

1ST REDUCTION WHEEL ON LAYSHAFT

DRAWN BY	C.J.T
TRACED BY	C.J.T
CHECKED BY	
PASSED BY	H.
DATE 14·1·19	

H112

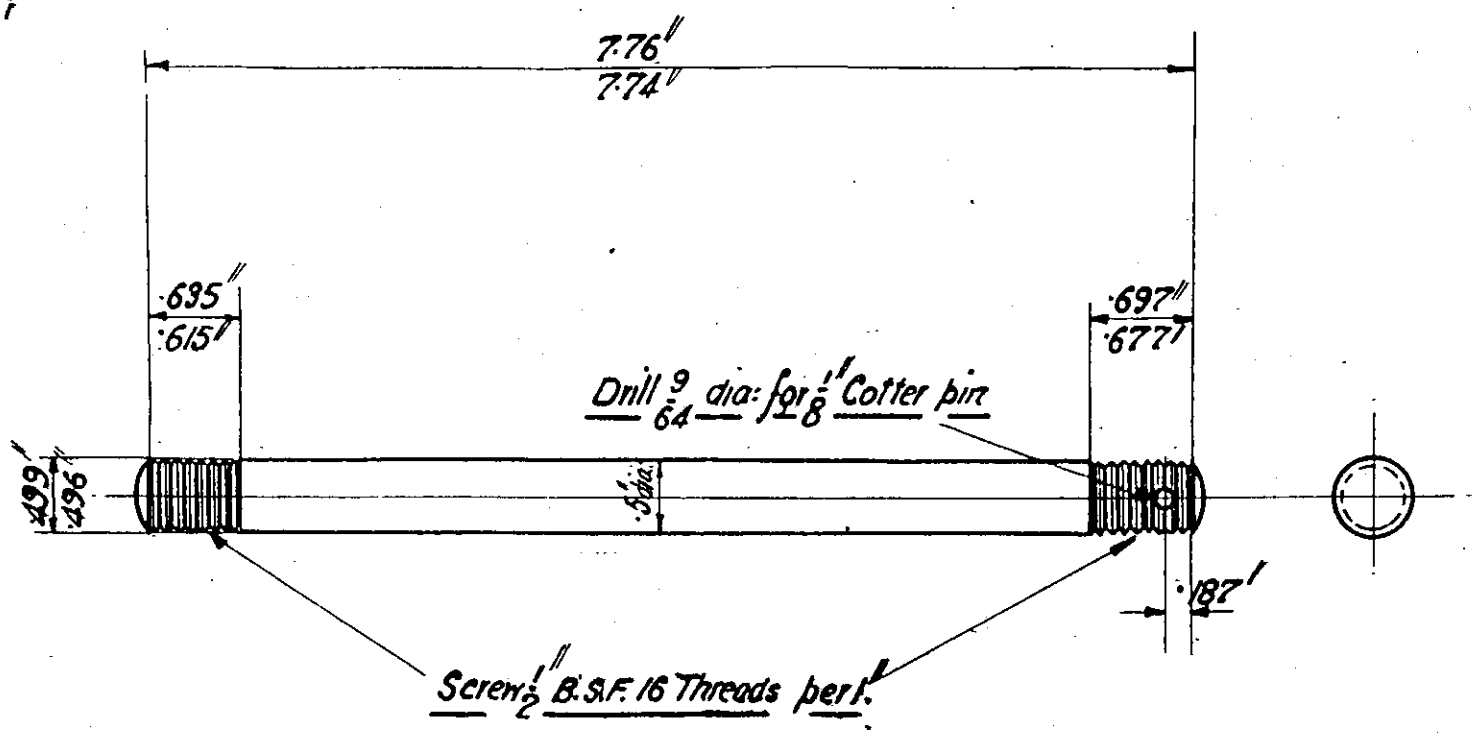

DRAWING No. 160-8.	
MATERIAL. B. D. S.	
HEAT TREATMENT.	

STUD FOR SUB FRAME SUSPENSION BKT.

DRAWN BY	
TRACED BY	
CHECKED BY	
PASSED BY	
DATE 10-1-42	

H113

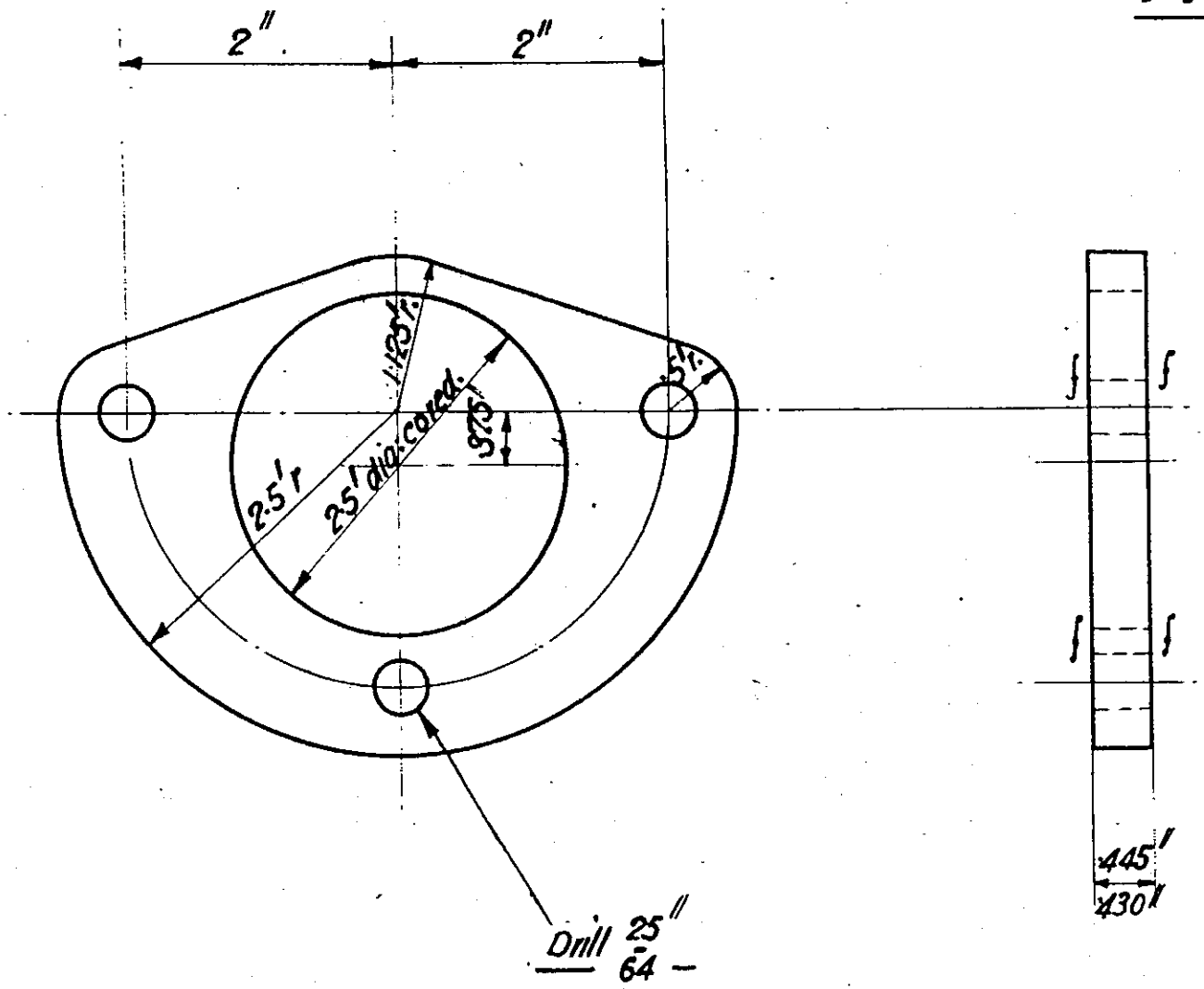

DRAWING Nº. 161-8.

MATERIAL. ALUM.

HEAT TREATMENT.

DISTANCE PIECE (for Rear Spring Bracket).

DRAWN BY	
TRACED BY	
CHECKED BY	
PASSED BY	
DATE 10-1-19.	

H 126

M/C at "f"

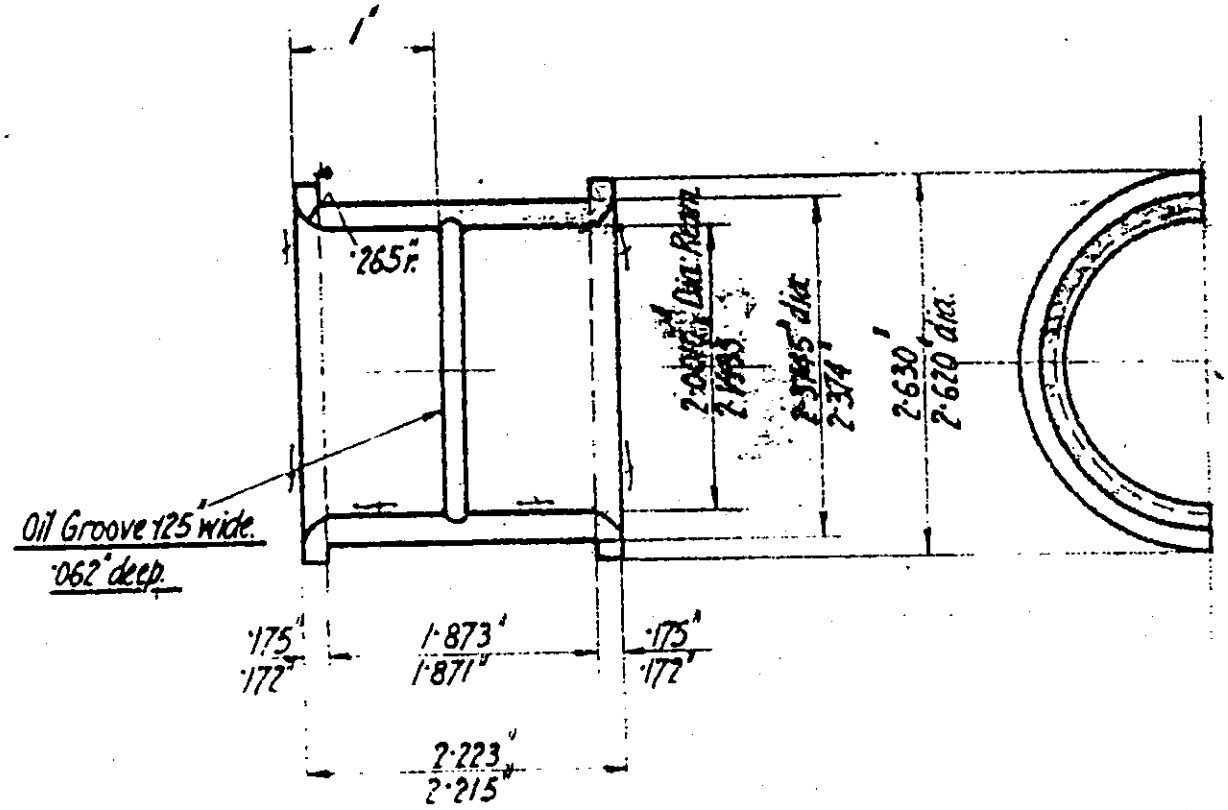

Retraced [illegible]-22

DRAWING No. 280-S	
MATERIAL W. M	
HEAT TREATMENT NONE	

MAIN BEARING (SHORT)

DRAWN BY	[illegible]
TRACED BY	[illegible]
CHECKED BY	[illegible]
PASSED BY	[illegible]
DATE [illegible]	

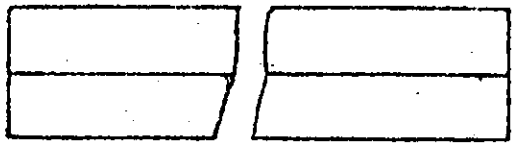

.4375

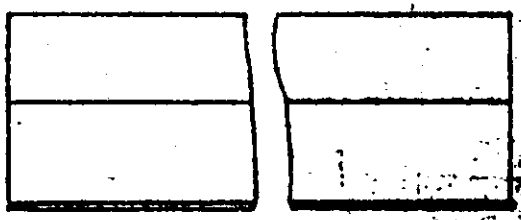

DRAWING No. 307 - S	DRAWN BY
MATERIAL. Charcoal Iron.	TRACED BY
HEAT TREATMENT.	CHECKED BY
	PASSED BY
	DATE 28-2-19

H132

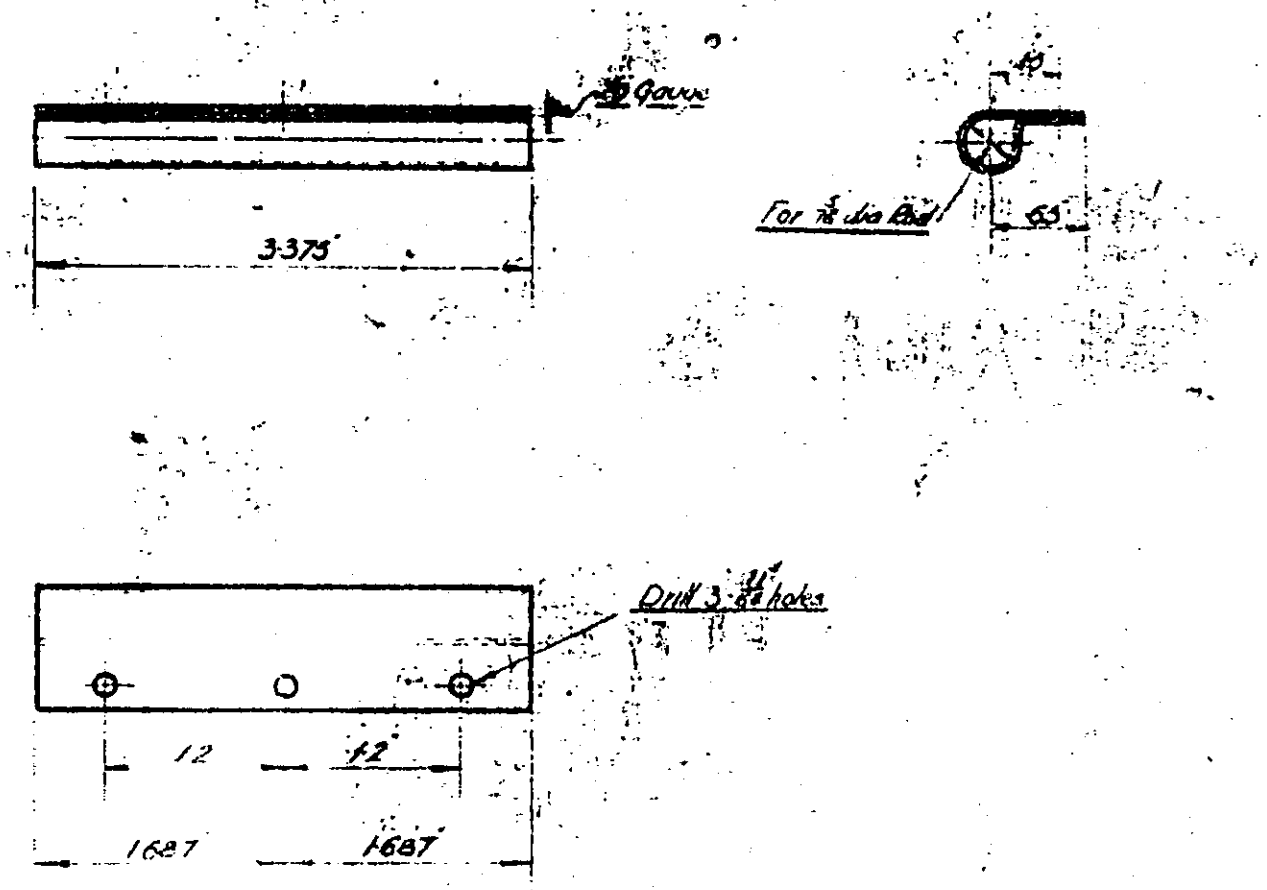

DRAWING No. 307-S

MATERIAL GERMAN SILVER

HEAT TREATMENT.

SIDE DONNET FENCE

H 133

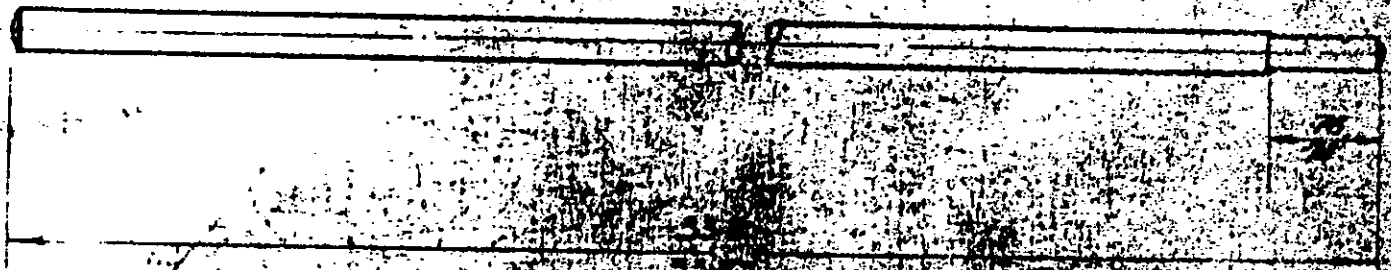

DRAWING No. 30S – S	
MATERIAL. B.D.S.	
HEAT TREATMENT.	TOP ROD FOR NET FENCE

H134

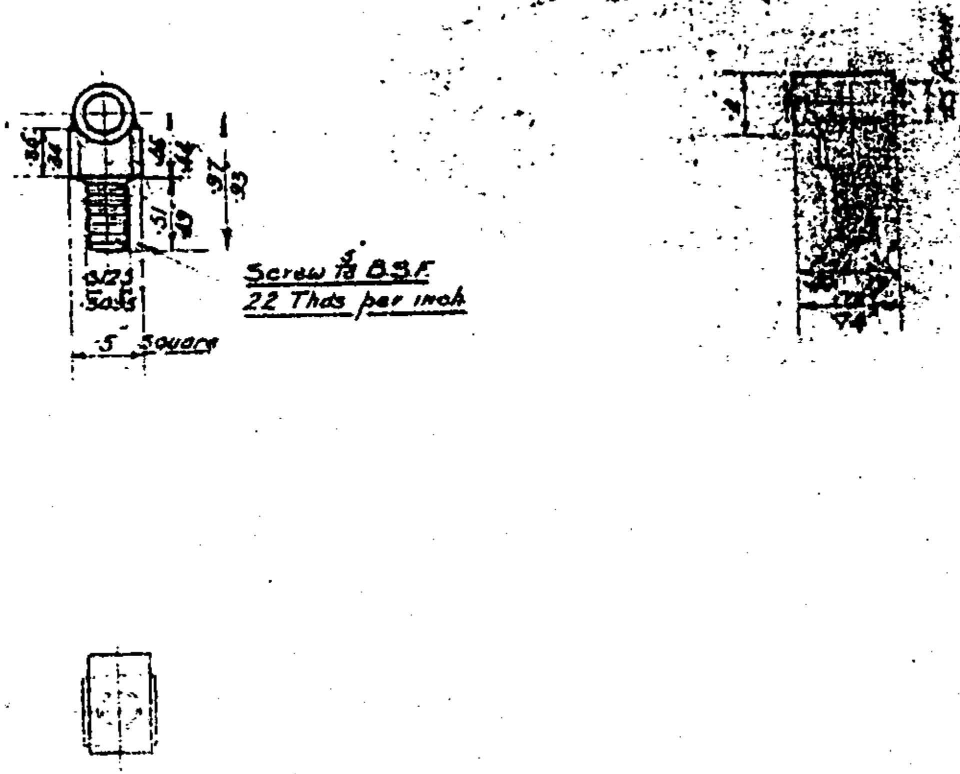

DRAWING No. 105-S	BONNET HINGE PIN	DRAWN BY
MATERIAL BRASS STO		TRACED BY
HEAT TREATMENT		CHECKED BY
		PASSED BY
		DATE

H136

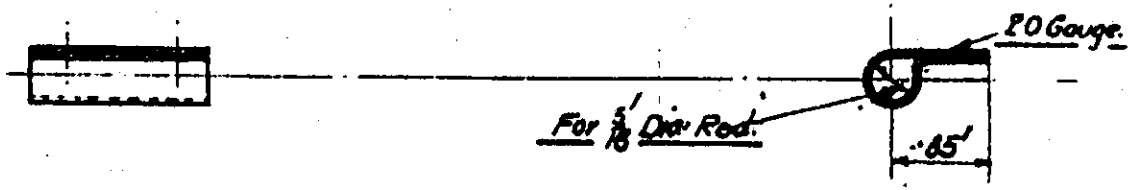

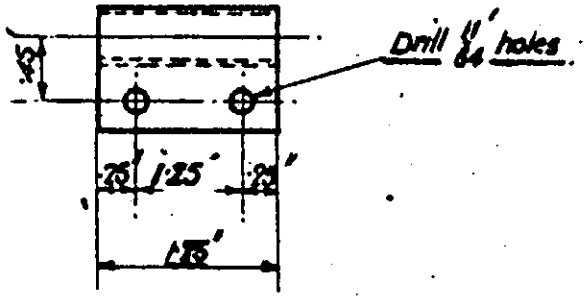

DRAWING No. B 34 — S.
MATERIAL, GERMAN SILVER
HEAT TREATMENT.

BONNET SIDE HINGE.

DRAWN BY	C.W.S.
TRACED BY	
CHECKED BY	
PASSED BY	
DATE	8-5-9

H 14-5

M/C all over

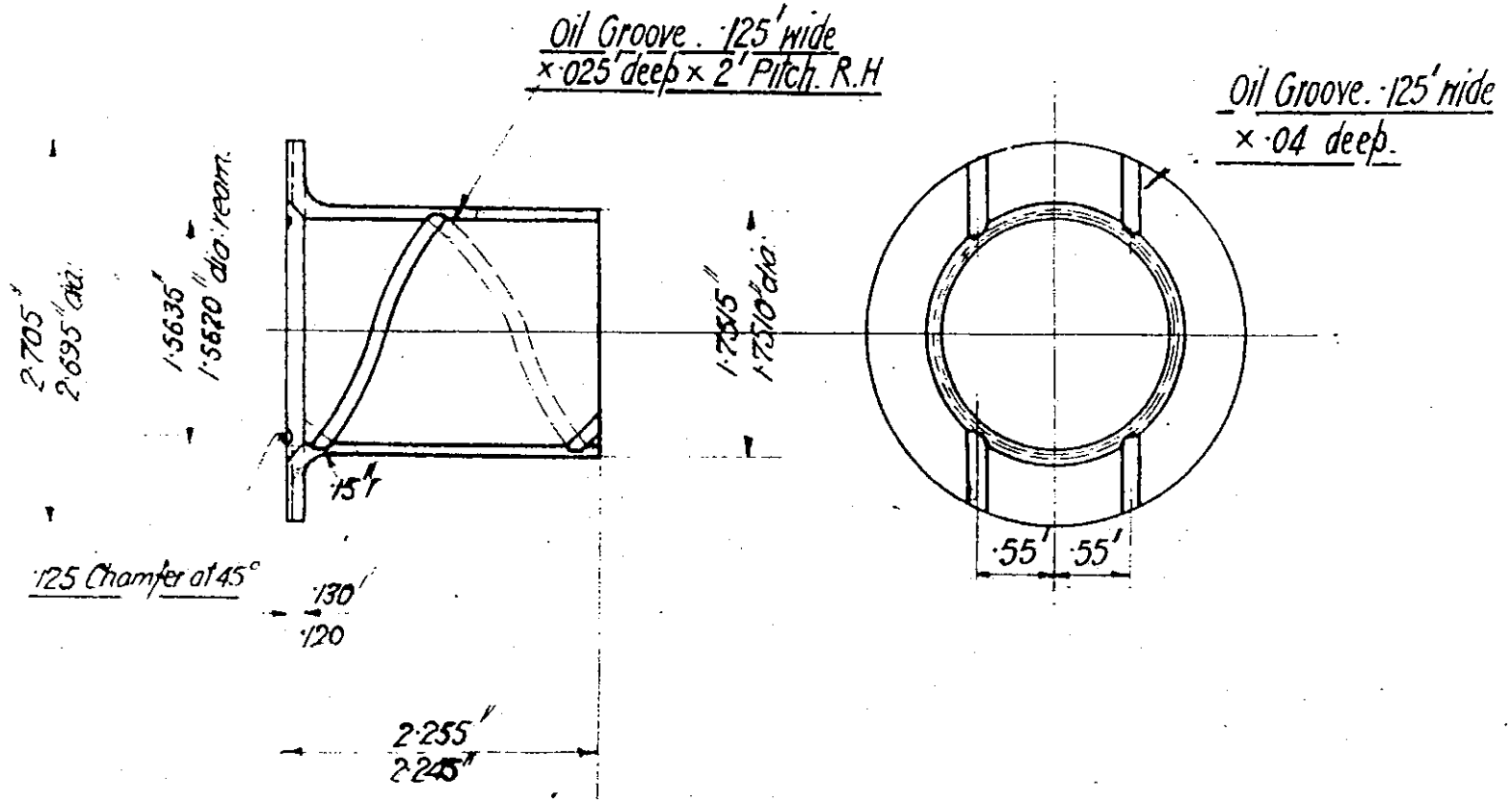

DRAWING No. 141-8.

MATERIAL: P. B. CAST

HEAT TREATMENT. NONE

BUSH FOR DIFF: CAGE

DRAWN BY	F.C.
TRACED BY	
CHECKED BY	
PASSED BY	
DATE 17-1-19	

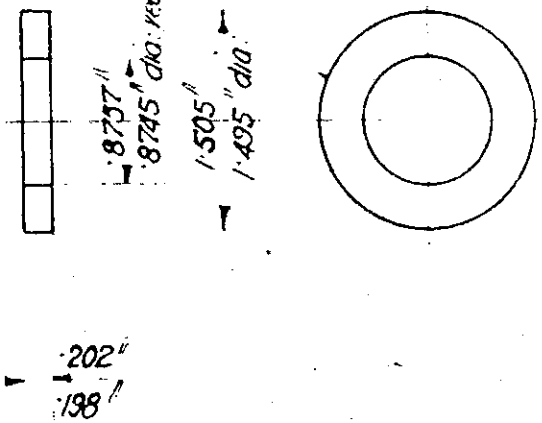

DRAWING No. 141-8.

MATERIAL P.B.

HEAT TREATMENT. NONE

PLANET PINION WASHER.

DRAWN BY	
TRACED BY	
CHECKED BY	
PASSED BY	
DATE 17-1-13.	

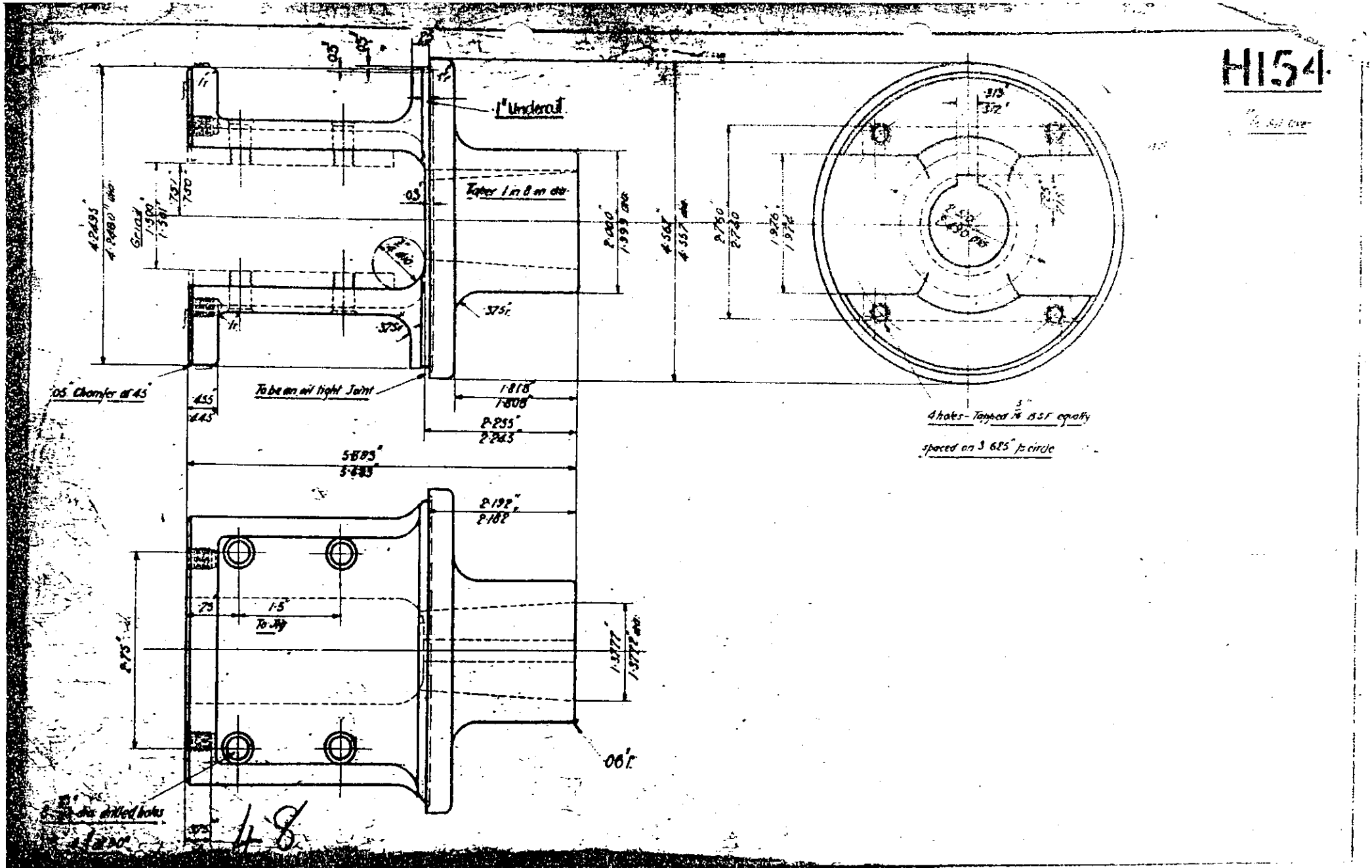
H154
1" Undercut
Taper 1 in 8 in dia
To be an oil tight Joint
.05" Chamfer at 45°
4 holes - Tapped 3/16" BSF equally spaced on 3.625" p circle
To Jig
48

H135

M/C all over

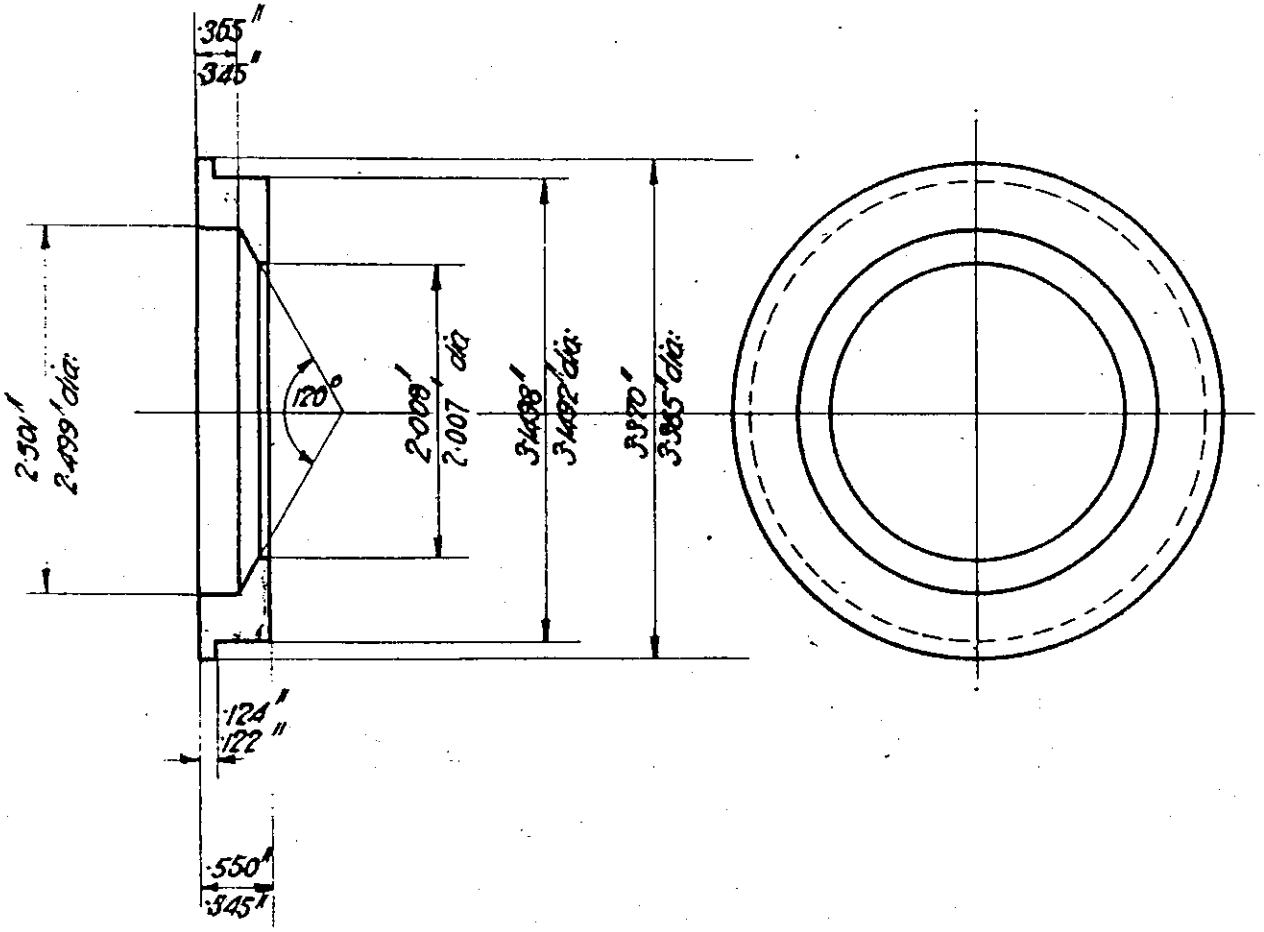

DRAWING No. 143 - S

MATERIAL. C.I.

HEAT TREATMENT. NONE

STUFFING BOX

DRAWN BY	F.C.
TRACED BY	
CHECKED BY	
PASSED BY	
DATE	17-1-13.

V 5637 H156

AL. CAST. Y. ALLOY.

M/c all over

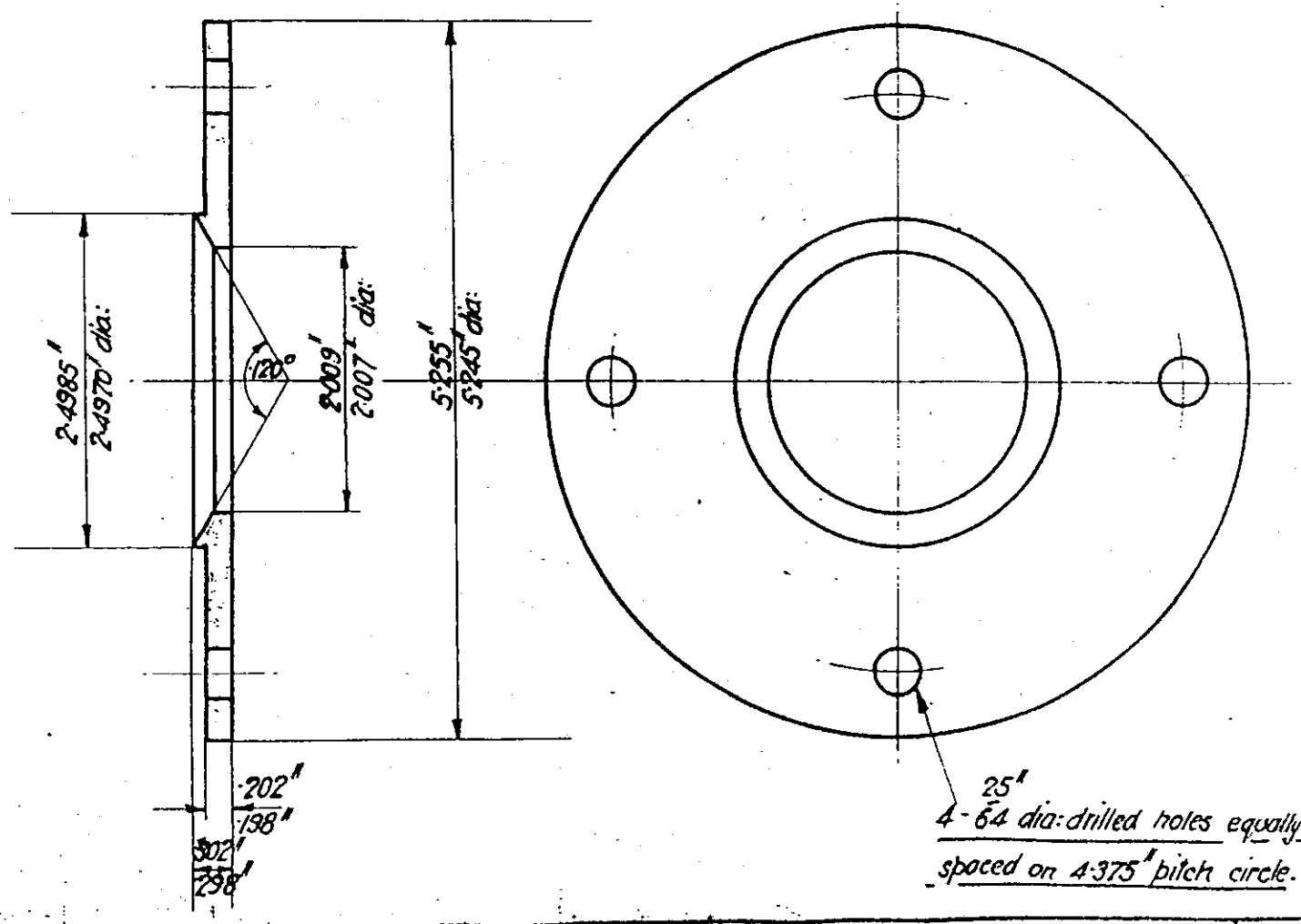

DRAWING No. 143-S	STUFFING BOX GLAND	DRAWN BY	F.C.
MATERIAL - M.S. 20 C. Stng.		TRACED BY	[illegible]
HEAT TREATMENT - Al.		CHECKED BY	[illegible]
		PASSED BY	[illegible]
		DATE 17-1-19.	

H163

M/c all over

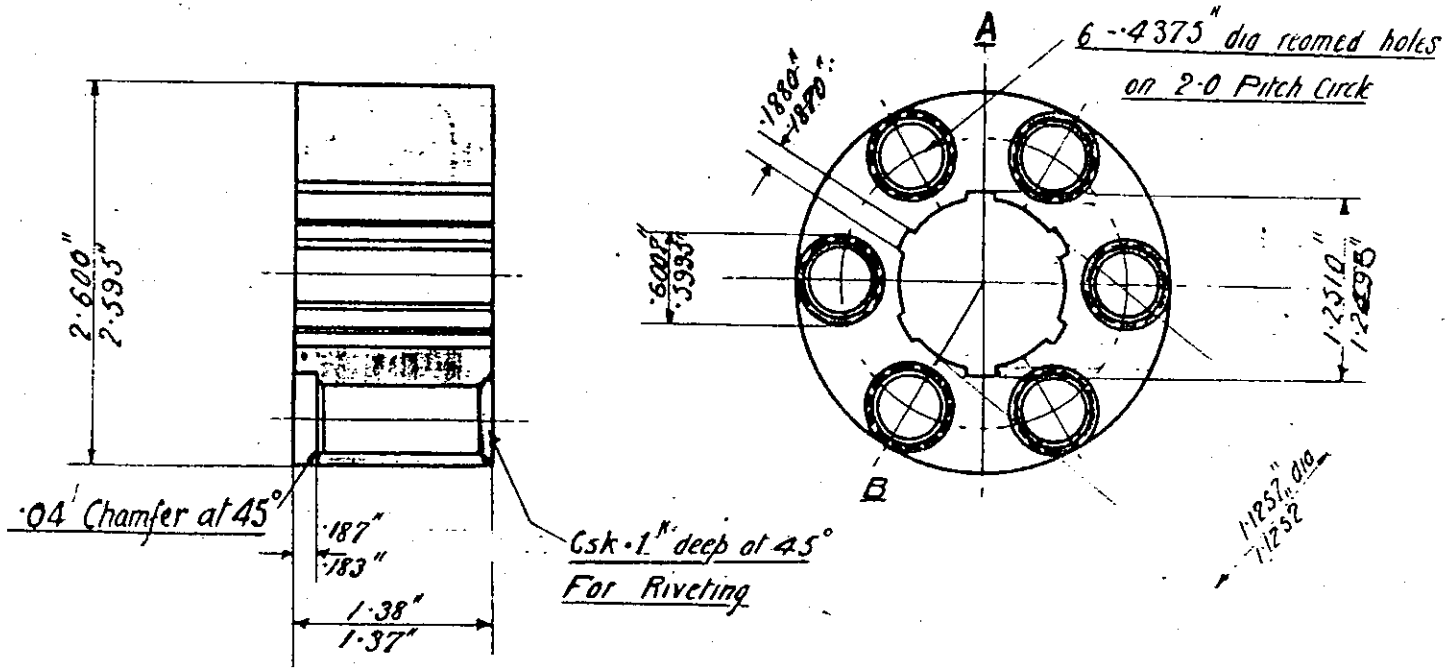

SECTION AT A.B.

DRAWING No. 145-S	REAR HUB DRIVING DOG
MATERIAL H.T.S.40C.	
HEAT TREATMENT. A2.	

DRAWN BY	
TRACED BY	
CHECKED BY	
PASSED BY	
DATE 23-1-19	

H164

M/c all over

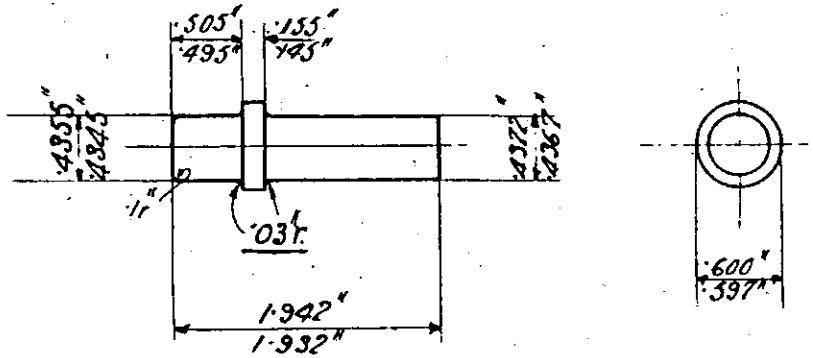

DRAWING Nº. 145-S

MATERIAL. 3% N.S

HEAT TREATMENT. A24B(W).

DRIVING BOGIE PEGS

DRAWN BY	
TRACED BY	
CHECKED BY	
PASSED BY	
DATE 23-1-18	

H172

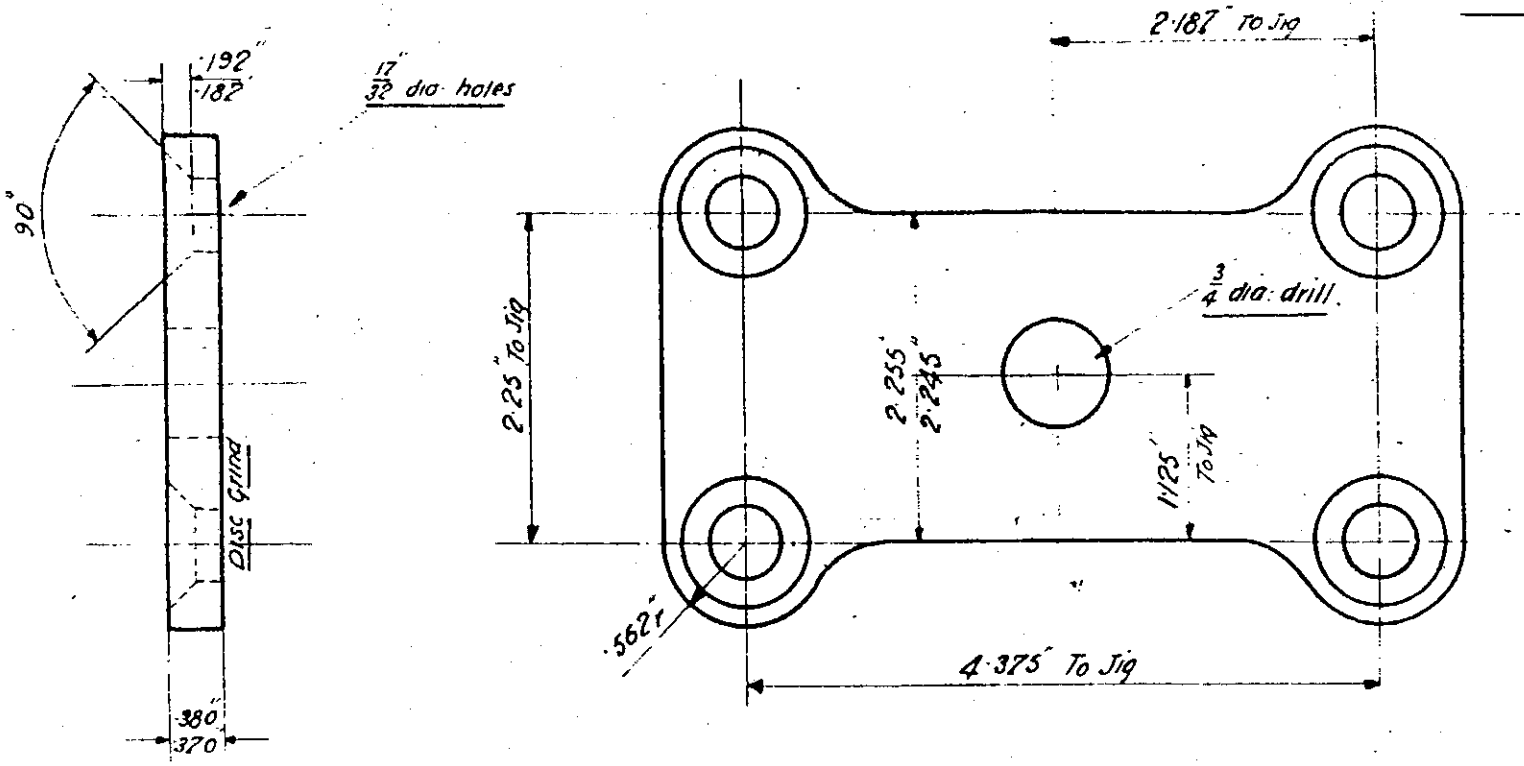

DRAWING No. 146 - S

MATERIAL. H.T.S 40 C Stpg.

HEAT TREATMENT. A2

REAR SPRING PLATE

DRAWN BY	[illegible]
TRACED BY	S.A.
CHECKED BY	[illegible]
PASSED BY	[illegible]
DATE 24 / [illegible] / [illegible]	

H173

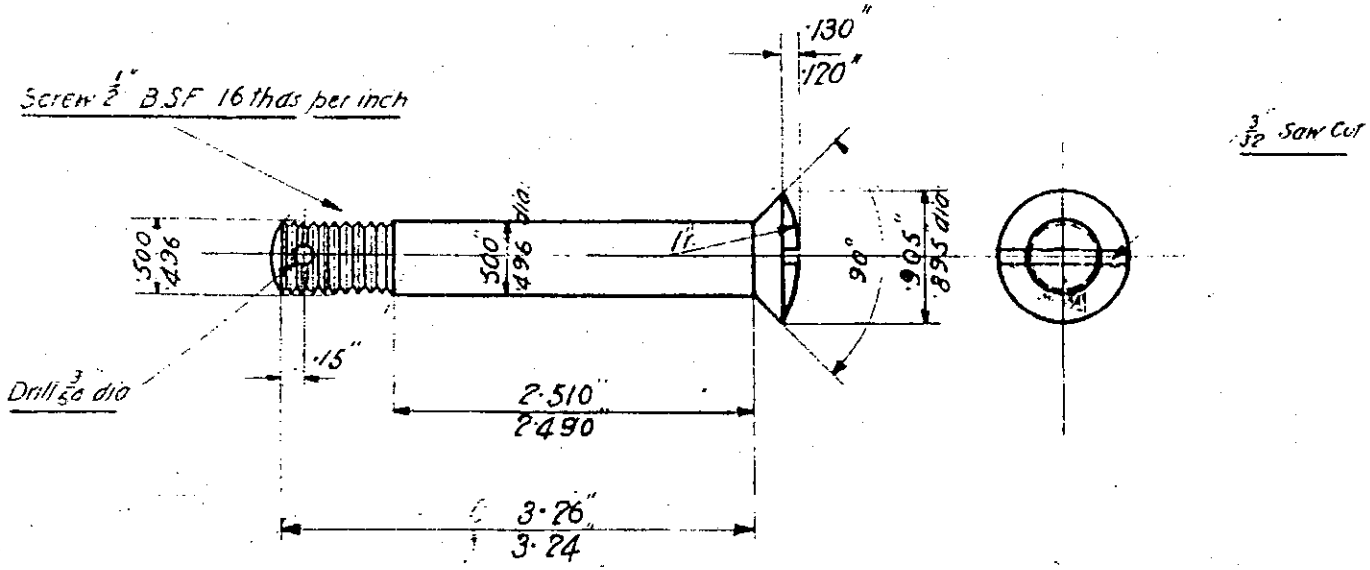

DRAWING No. 146 – S

MATERIAL. 3% NS.

HEAT TREATMENT.

REAR SPRING BOLT

DRAWN BY	
TRACED BY	
CHECKED BY	
PASSED BY	
DATE 24 - 1 - 19	

V 5636 H176

AL. CAST. Y. ALLOY.

M/c All Over

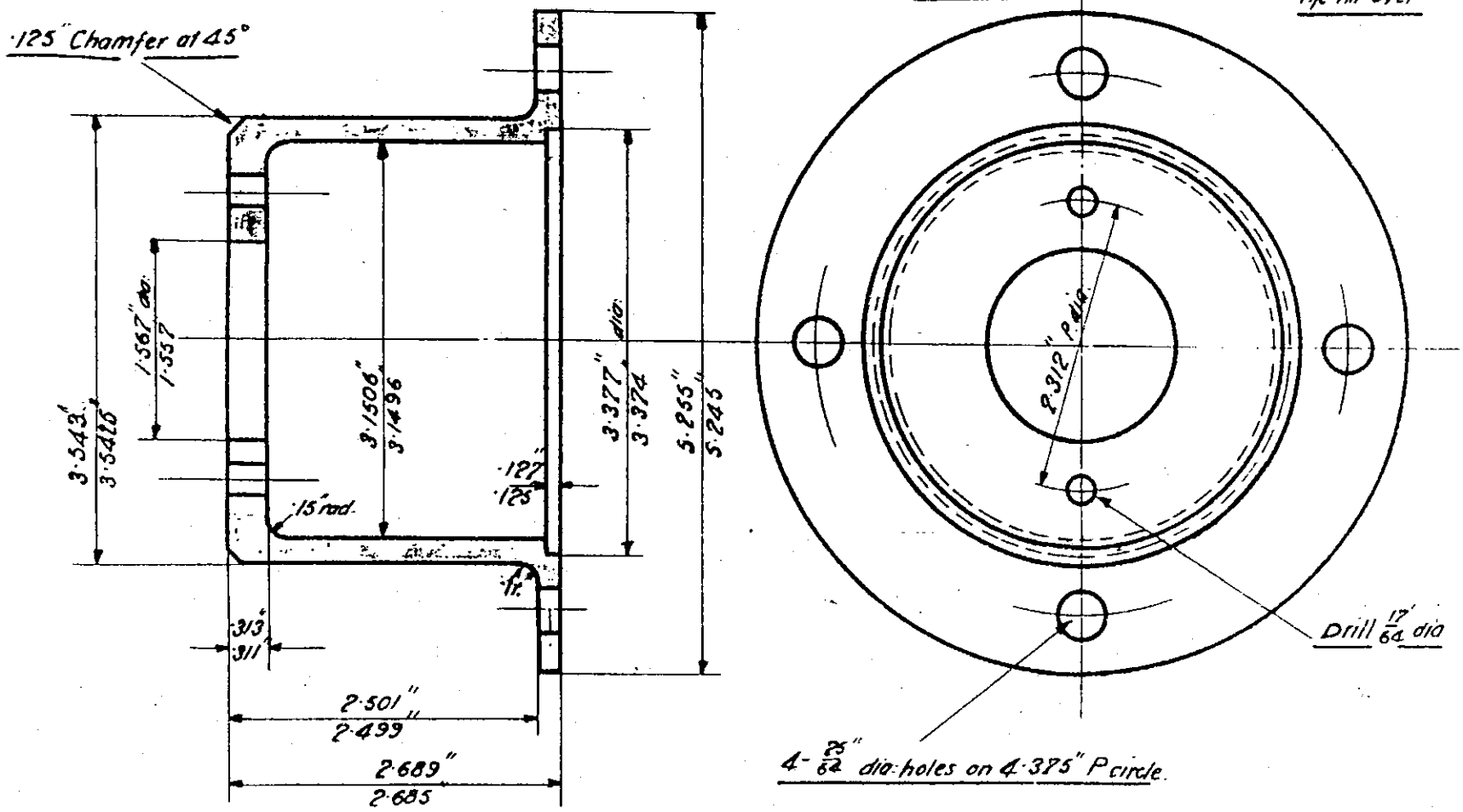

DRAWING No. 147 — S	
MATERIAL. M. I. CAST	
HEAT TREATMENT. NONE	

BEVEL PINION 13/13 CAGE

DRAWN BY	
TRACED BY	S.H.
CHECKED BY	
PASSED BY	
DATE 25 - 1 - 19	

H17S

M/c All Over

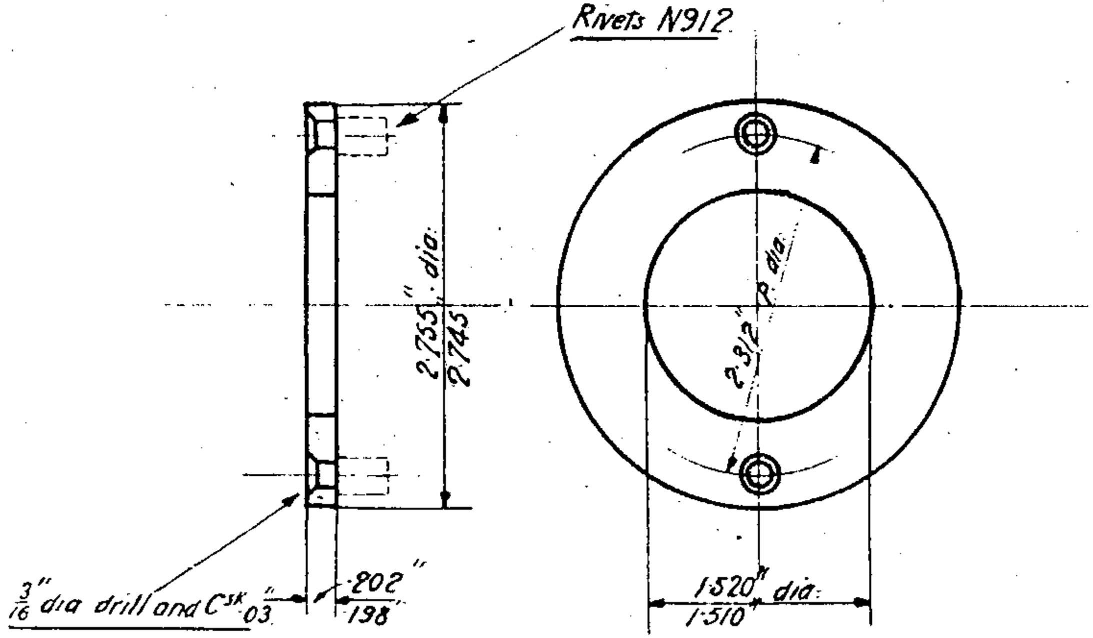

DRAWING No. 147 - S	THRUST WASHER
MATERIAL B.D.C.M.M.S. 1.S.C	
HEAT TREATMENT None	

DRAWN BY	
TRACED BY	S.H.
CHECKED BY	
PASSED BY	
DATE 25 - 1 - 19	

H181

VOLTS & AMPERES H151

AMPERES ONLY C585

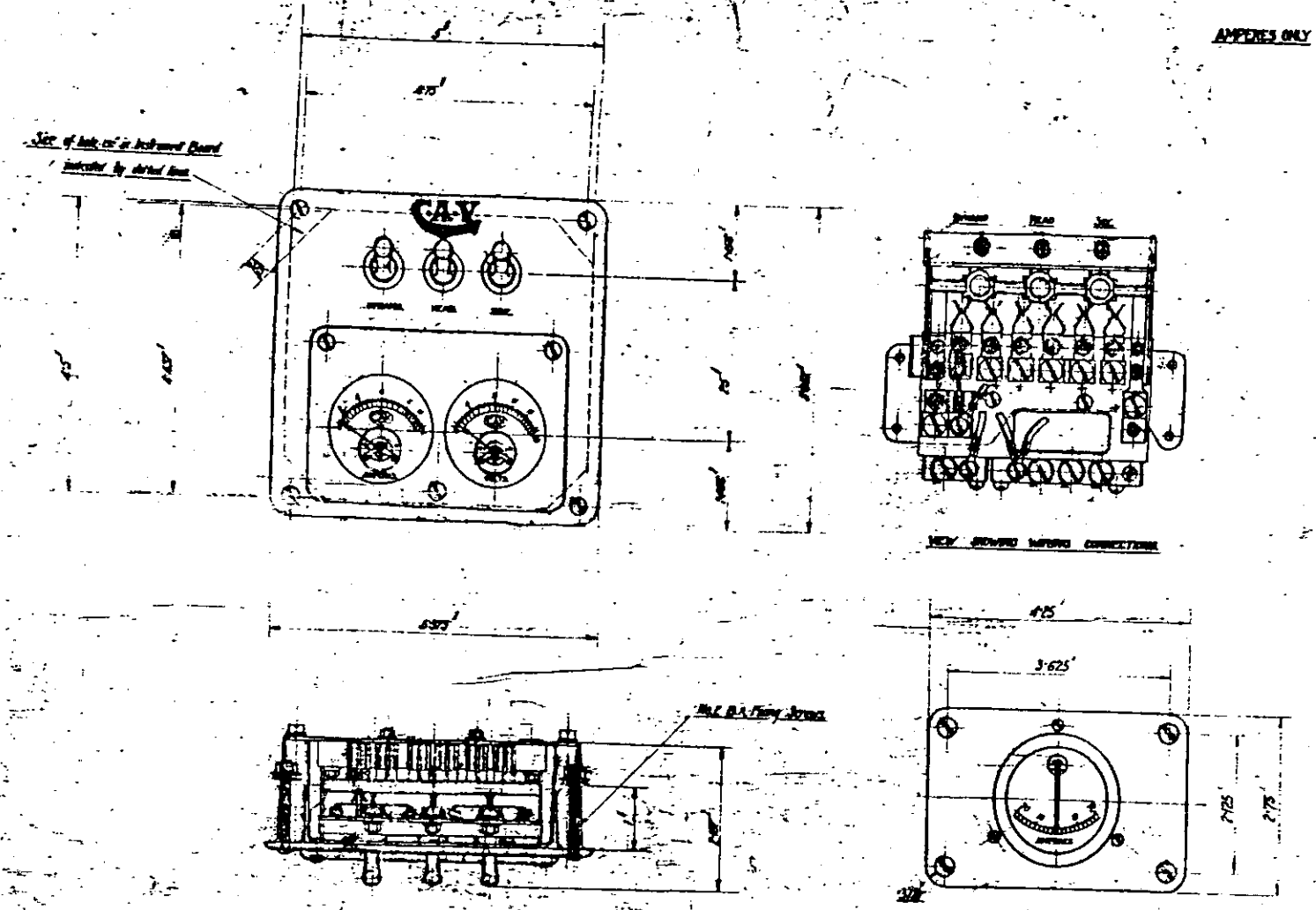

TYPE 10A

223

C.A.V. LIGHTING SWITCHBOARD

DRAWN BY
TRACED BY
CHECKED BY

HIS3

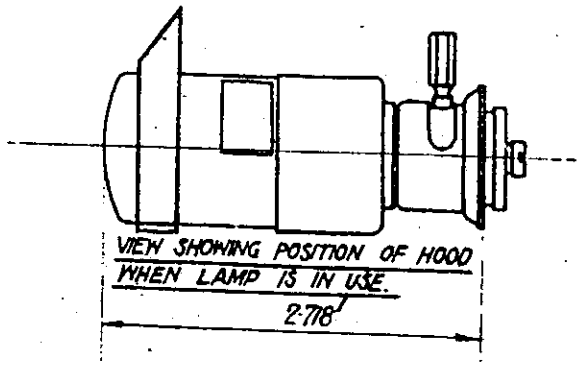

VIEW SHOWING POSITION OF HOOD WHEN LAMP IS IN USE.

2·718

2·375

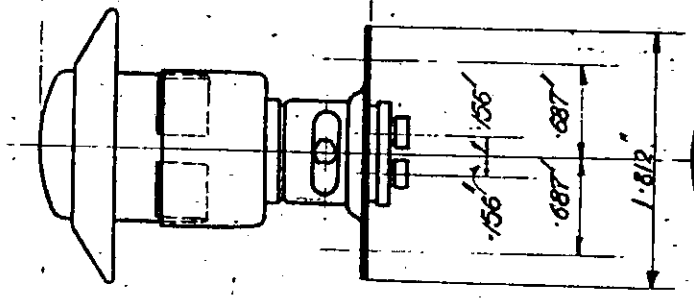

VIEW SHOWING POSITION OF HOOD WHEN LAMP IS NOT IN USE.

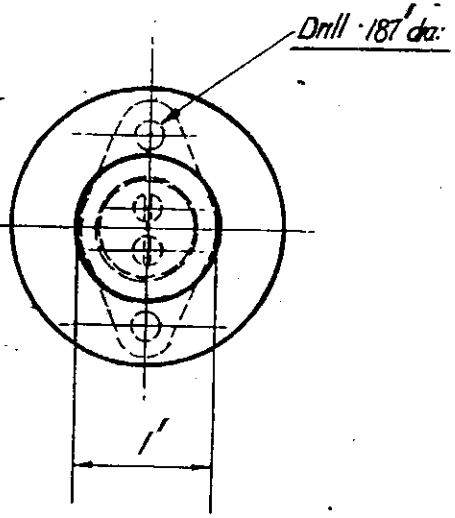

DRAWING Nº. SOS – S

MATERIAL. VARIOUS. (N.P.)

HEAT TREATMENT.

INSTRUMENT BOARD LIGHTER

DRAWN BY	
TRACED BY	
CHECKED BY	
PASSED BY	
DATE 25/10/19.	

H188

HISS

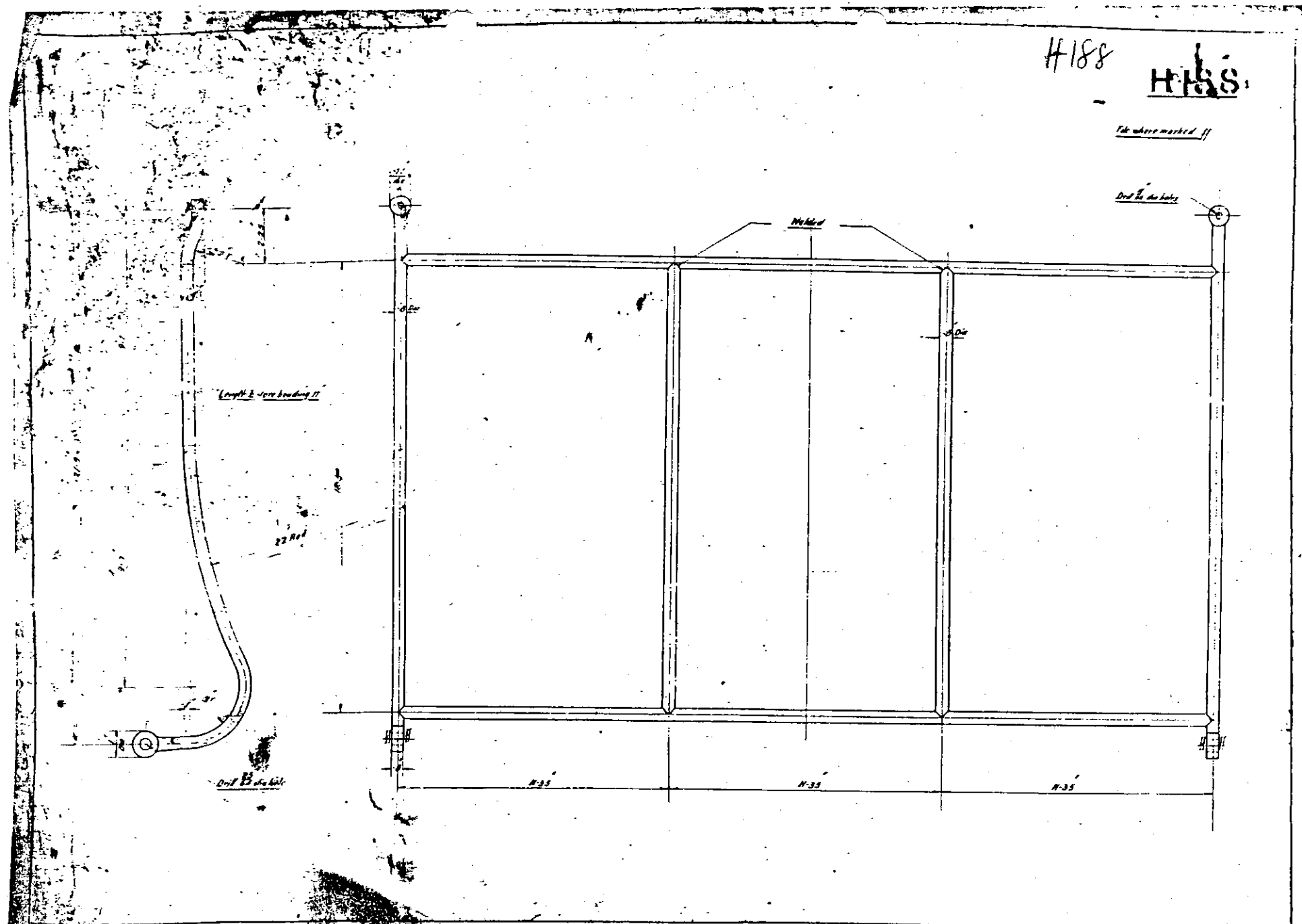

DRAWING No. 207-2	REAR BODY	DRAWN BY
MATERIAL No. 5	BODY PANEL GUARD	TRACED BY
HEAT TREATMENT		CHECKED BY
		PASSED BY
		DATE

H197

M/C all ✓

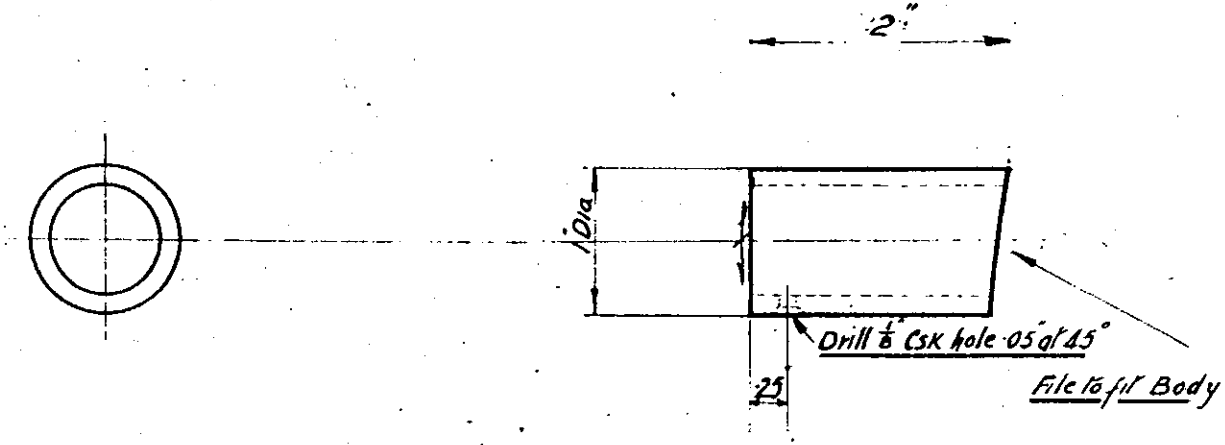

10 S.W.G

DRAWING No. 165 - S	HOOD IRON SLEEVE	DRAWN BY C.W.S
MATERIAL. W.S.T.		TRACED BY W.B.
HEAT TREATMENT.		CHECKED BY C.W.S.
		PASSED BY
		DATE 2·2·19

H19S

M/c All Over

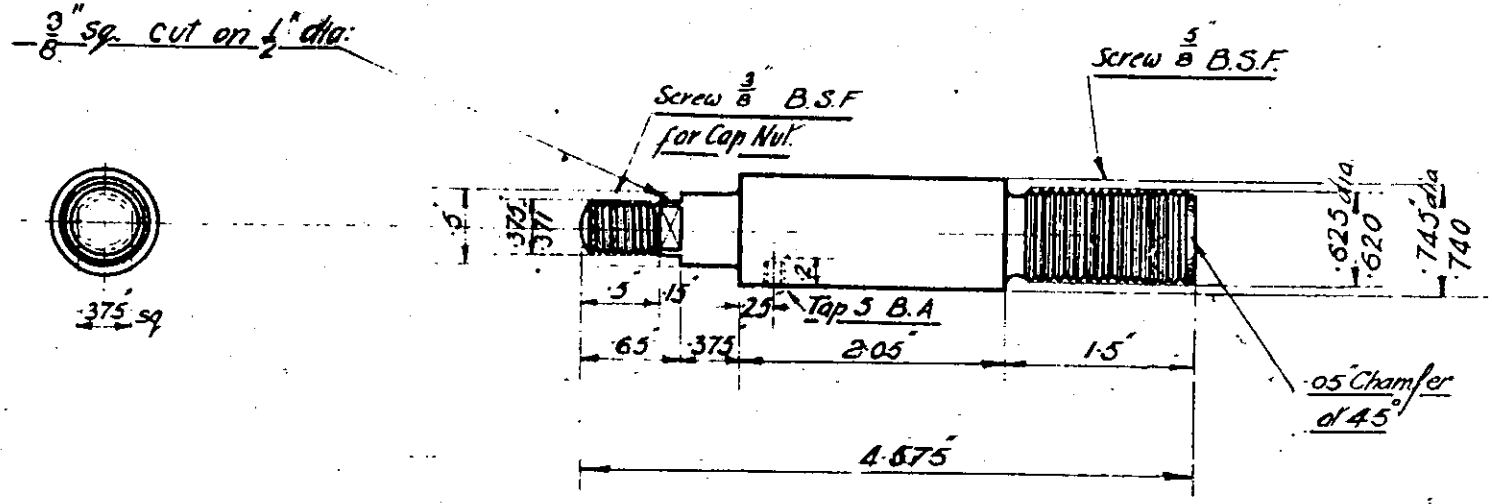

DRAWING No. 16S-S	HOOD PIVOT PIN	DRAWN BY C.W.S
MATERIAL B.D.S.		TRACED BY J.B.
HEAT TREATMENT		CHECKED BY C.W.S
		PASSED BY
		DATE 2-2-19

H199

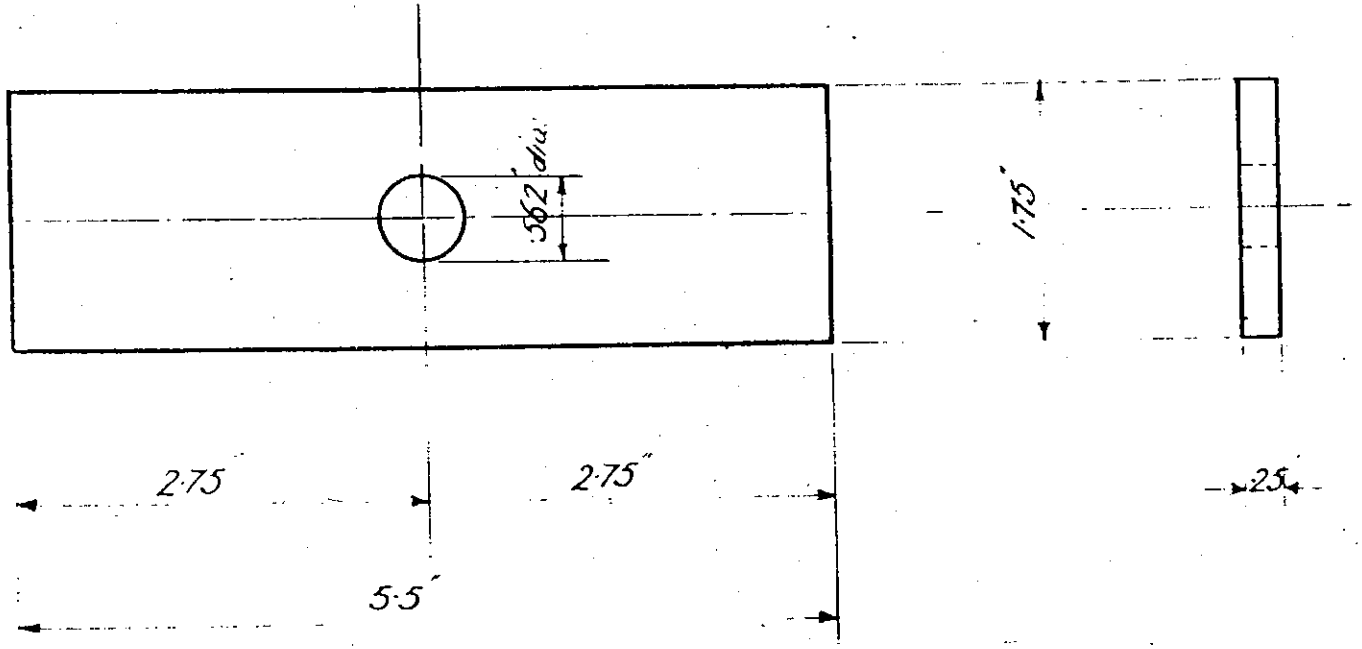

DRAWING No. 169-S

MATERIAL. LEATHER

HEAT TREATMENT.

REAR SPRING PACKING PIECE

DRAWN BY	
TRACED BY	
CHECKED BY	
PASSED BY	
DATE 30-1-19	

H200

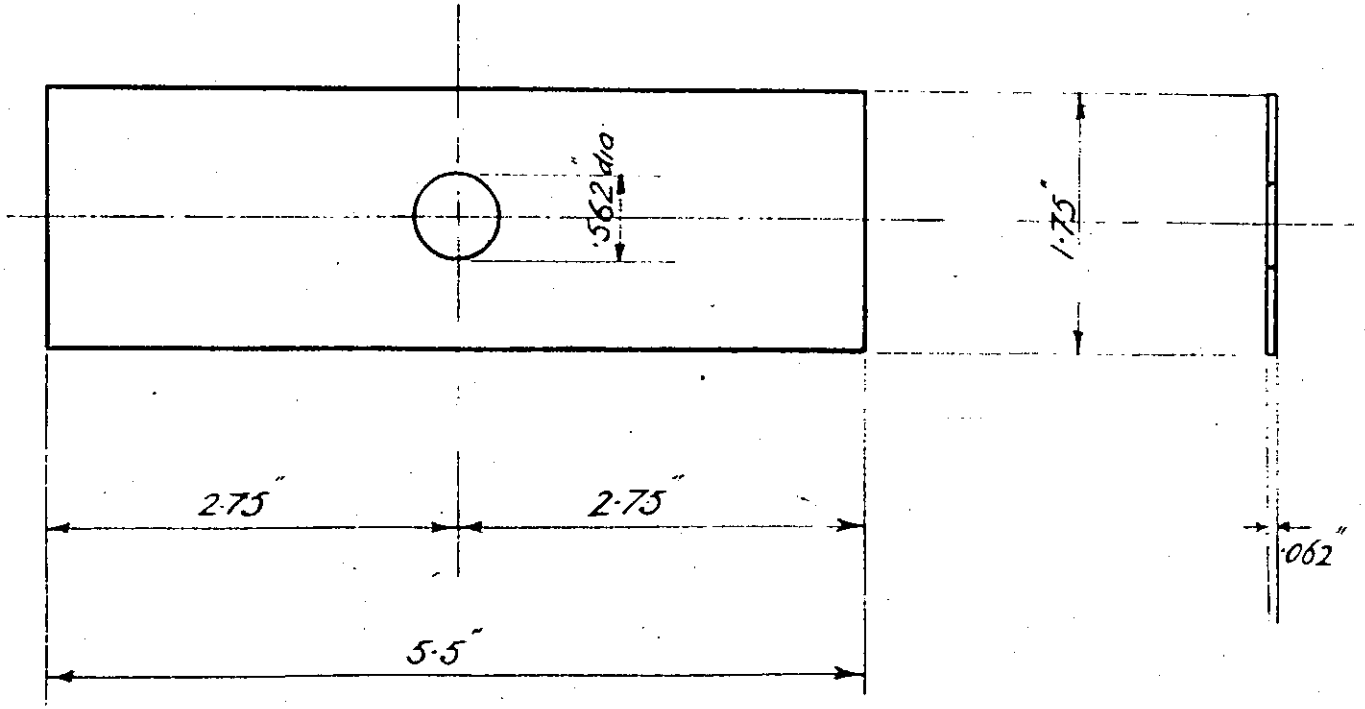

DRAWING No. 169-S	REAR SPRING PACKING PIECE
MATERIAL LEATHER	
HEAT TREATMENT	

DRAWN BY	
TRACED BY	
CHECKED BY	
PASSED BY	
DATE 30-1-19	

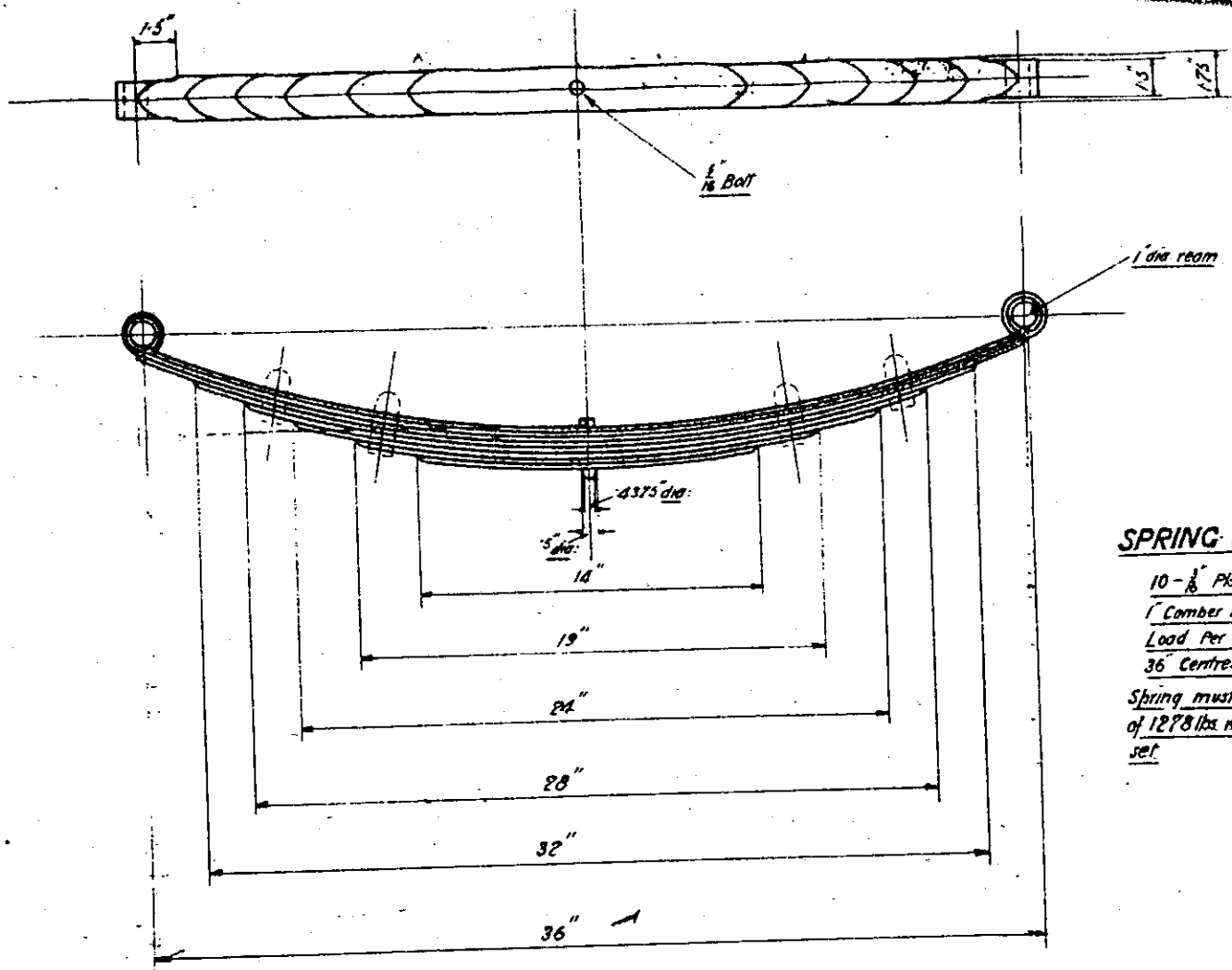

SPRING SPECIFICATION

10 – ⅜" Plates
1" Camber Loaded
Load Per Spring 6½ cwt.
36" Centres Loaded
Spring must carry test load of 1278 lbs without permanent set

~~SPRING SPECIFICATION~~

~~8 – 3/16" Plates~~
~~1" Camber Loaded.~~
~~4" Camber Unloaded.~~
~~Load Per Spring 5½ cwt~~
~~36" Centres Loaded.~~
CANCELLED 9-5-19

DRAWING Nº. 2-41
MATERIAL. SILICO. MANG.
HEAT TREATMENT.

FRONT SPRING (OFFSIDE)

DRAWN BY	S.H.
TRACED BY	S.H.
CHECKED BY	
PASSED BY	
DATE 31 –	

H204

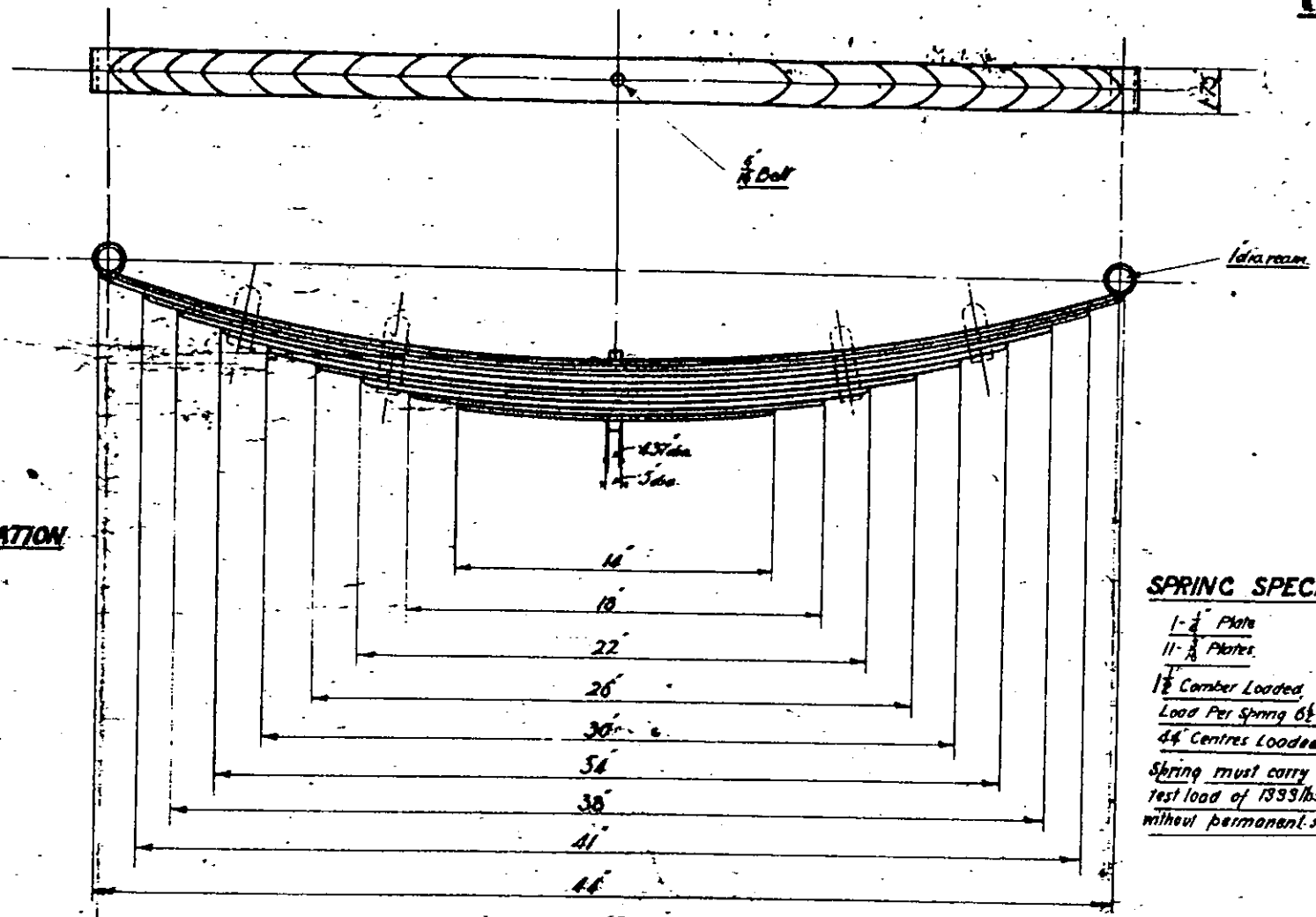

SPRING SPECIFICATION

A- ½ Plate

N ⅜ Plates

½ Camber Loaded

Load Per Spring 6 cwt

44" Centres Loaded

CANCELLED 3-3-39

SPRING SPECIFICATION

1-½" Plate

11-⅜ Plates

1½ Camber Loaded

Load Per Spring 6½ cwt.

44" Centres Loaded.

Spring must carry test load of 1393 lbs without permanent set.

DRAWN BY

TRACED BY

CHECKED BY

PASSED BY

DATE 3-2-39

H21S

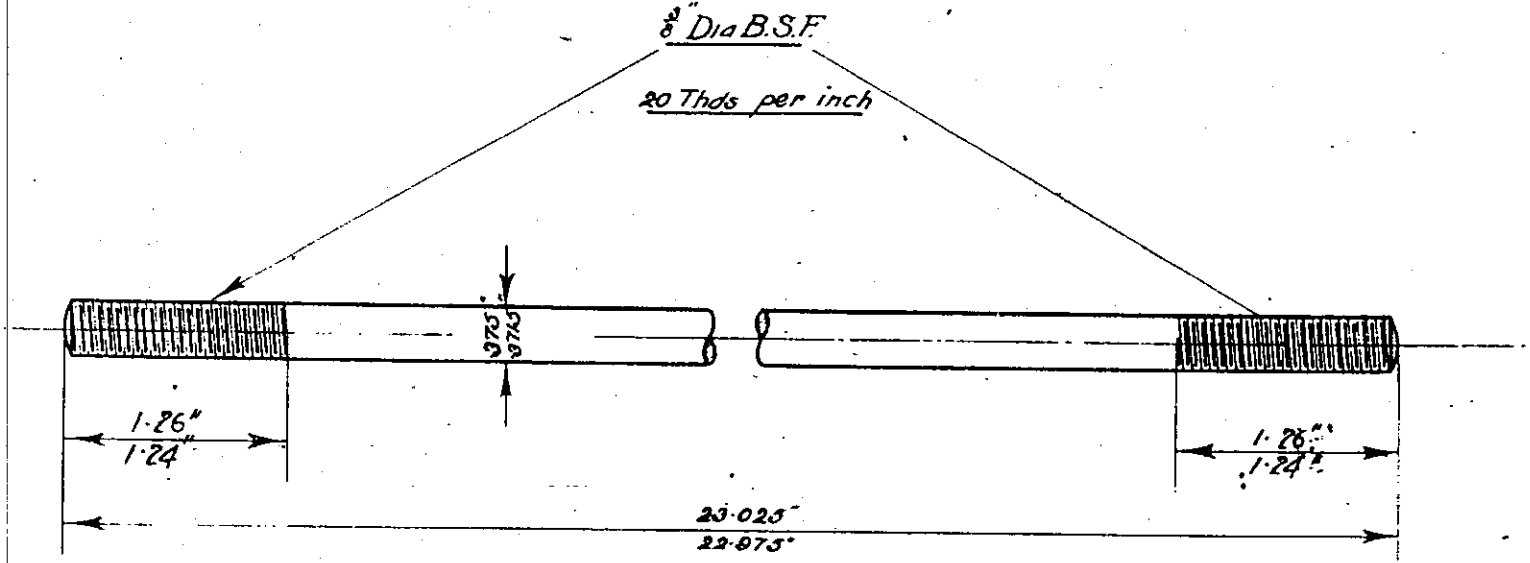

DRAWING No. 174-S	BRAKE ROD.	DRAWN BY
MATERIAL. B.D.S.		TRACED BY
HEAT TREATMENT.		CHECKED BY
		PASSED BY
		DATE 8·2·19

H227

File [illegible] marked

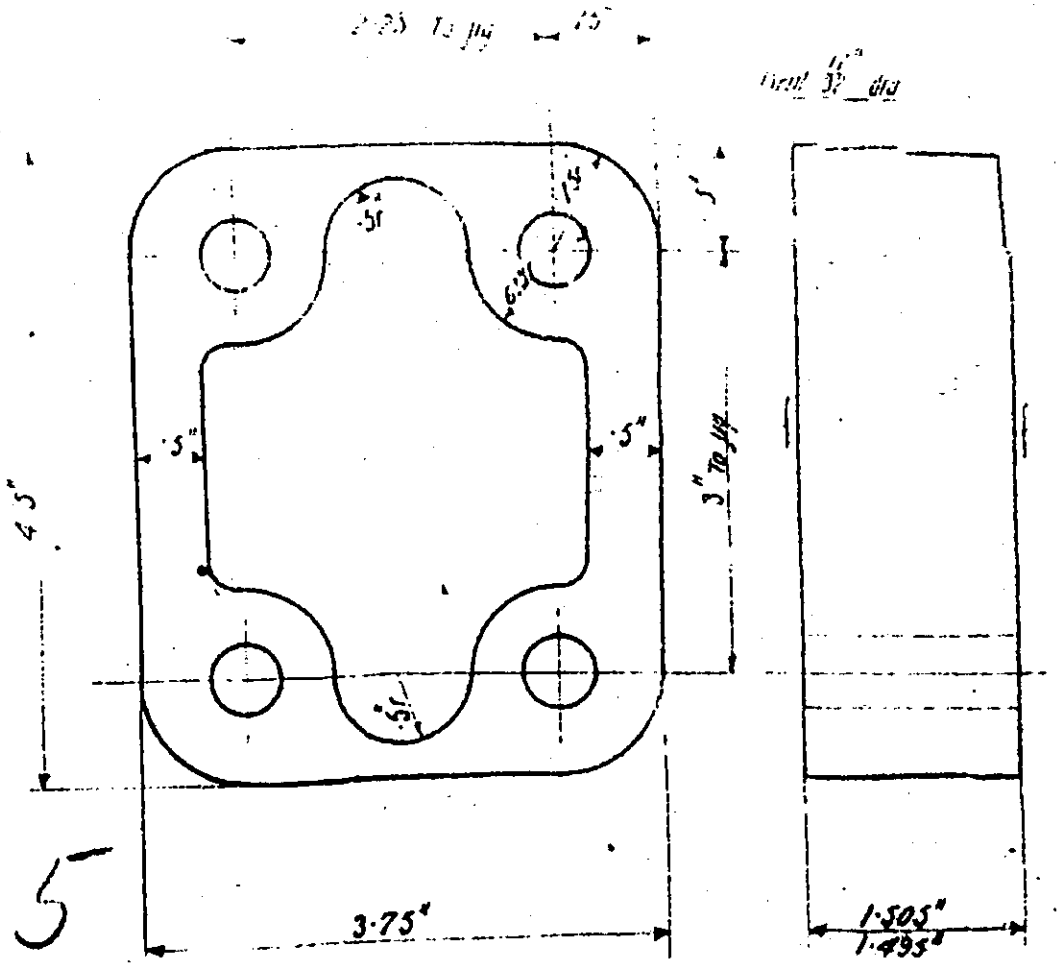

275

No. 275-8

[illegible]

[illegible] PIECE

DRAWN BY	
TRACED BY	
CHECKED BY	
[illegible]	

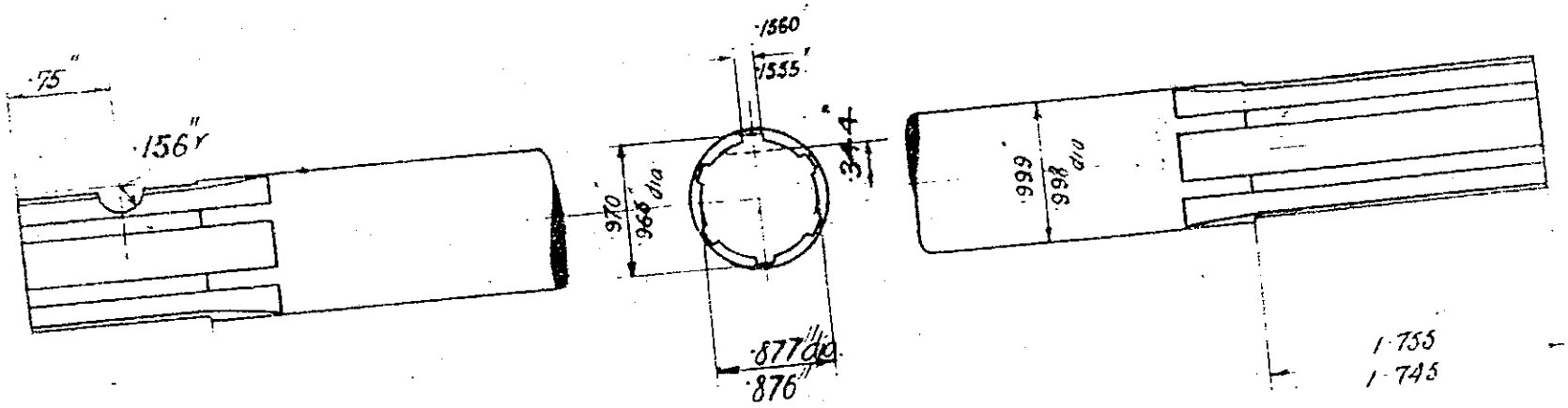

177-S

CHANGE SPEED SHAFT

DRAWN BY	F.C.
TRACED BY	
CHECKED BY	F.C.
PASSED BY	
DATE 7.2.19	

H234

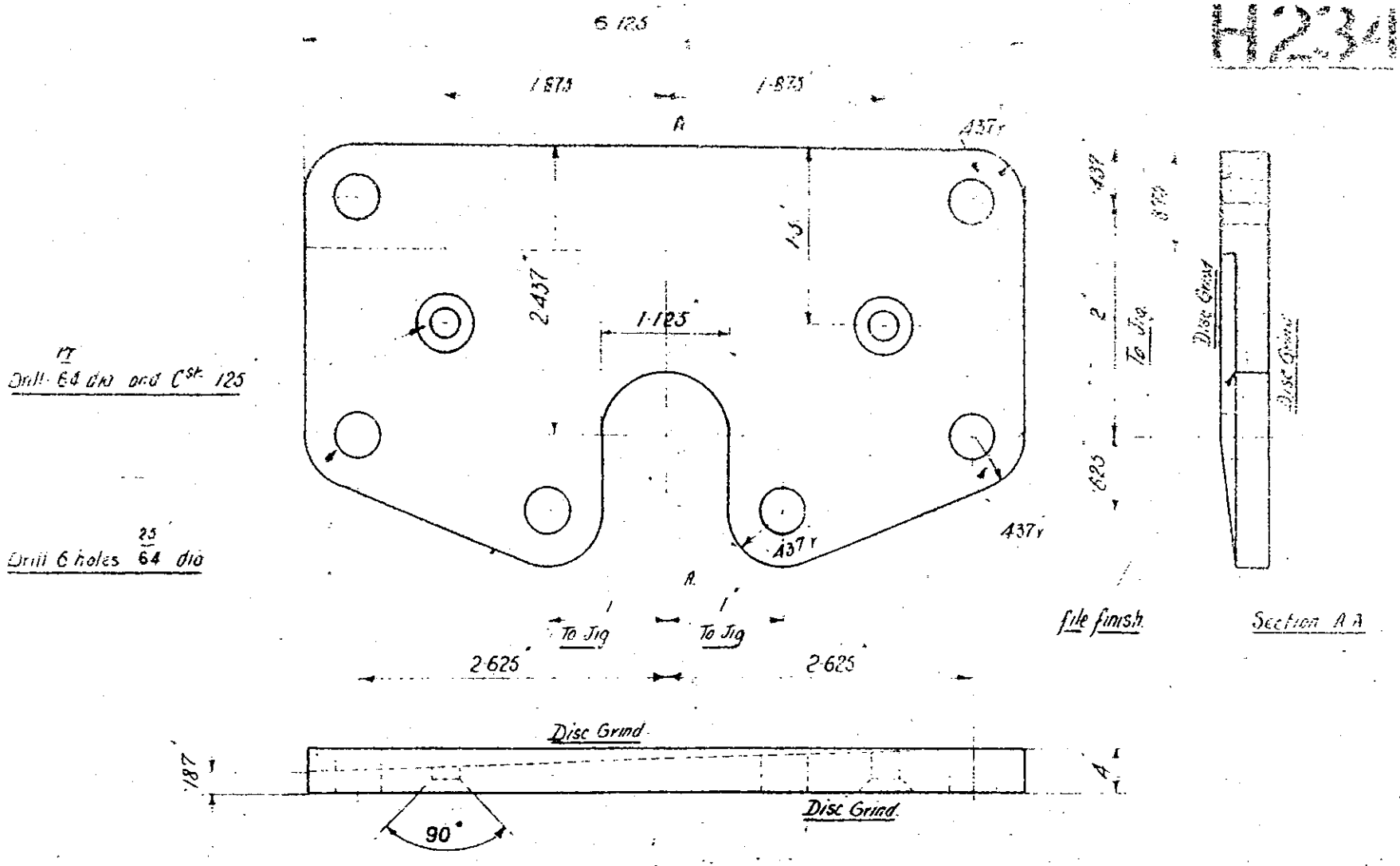

17
Drill ·64 dia and C'sk ·125

25
Drill 6 holes 64 dia

file finish

Section A A

DRAWING No. 177-8	
DRAWN BY	F.C.
TRACED BY	A.B.
CHECKED BY	

H235

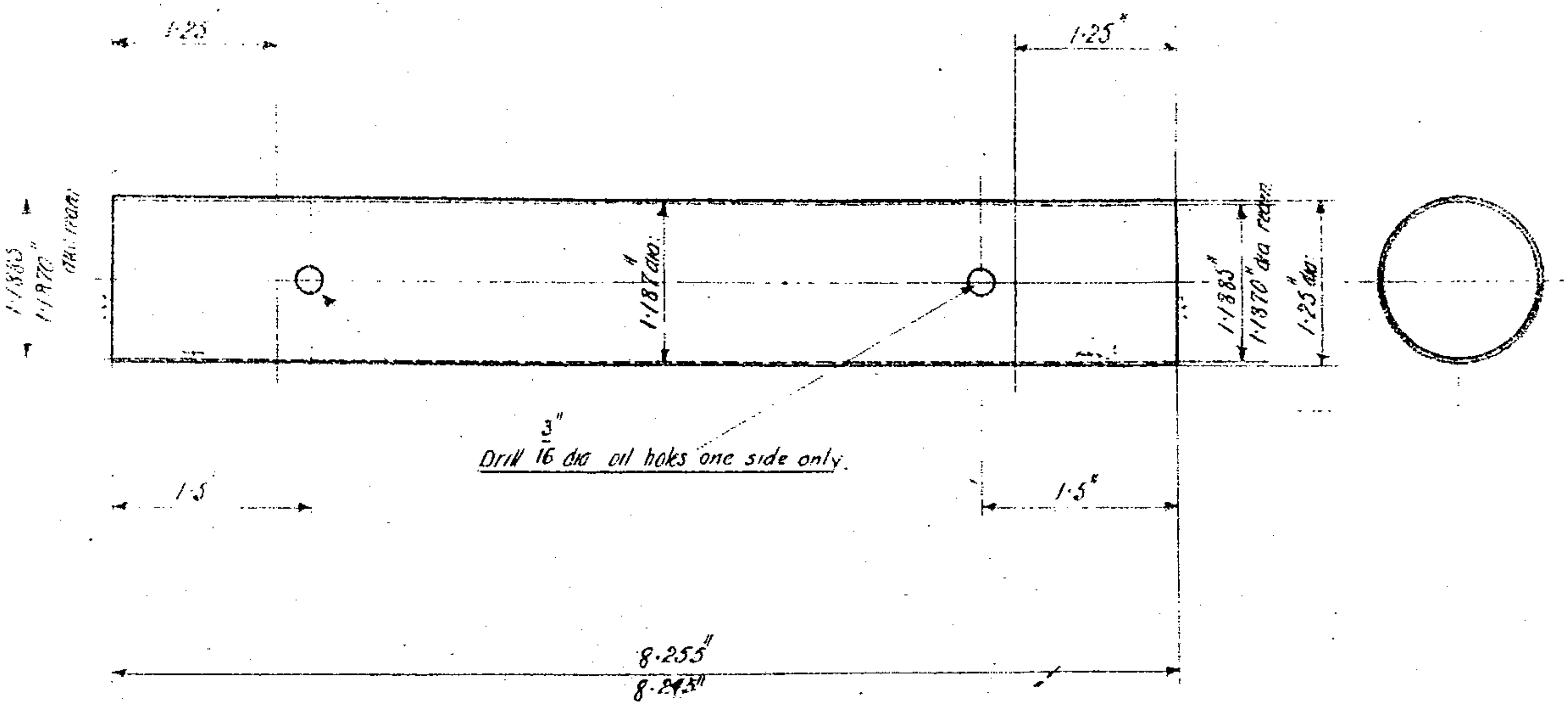

DRAWING Nº. 17S–S	CHANGE SPEED SHAFT TUBE	DRAWN BY	F.C
MATERIAL. W.S.T		TRACED BY	S.H.H
HEAT TREATMENT.		CHECKED BY	
		PASSED BY	
		DATE 7·2·19	

H 24.4

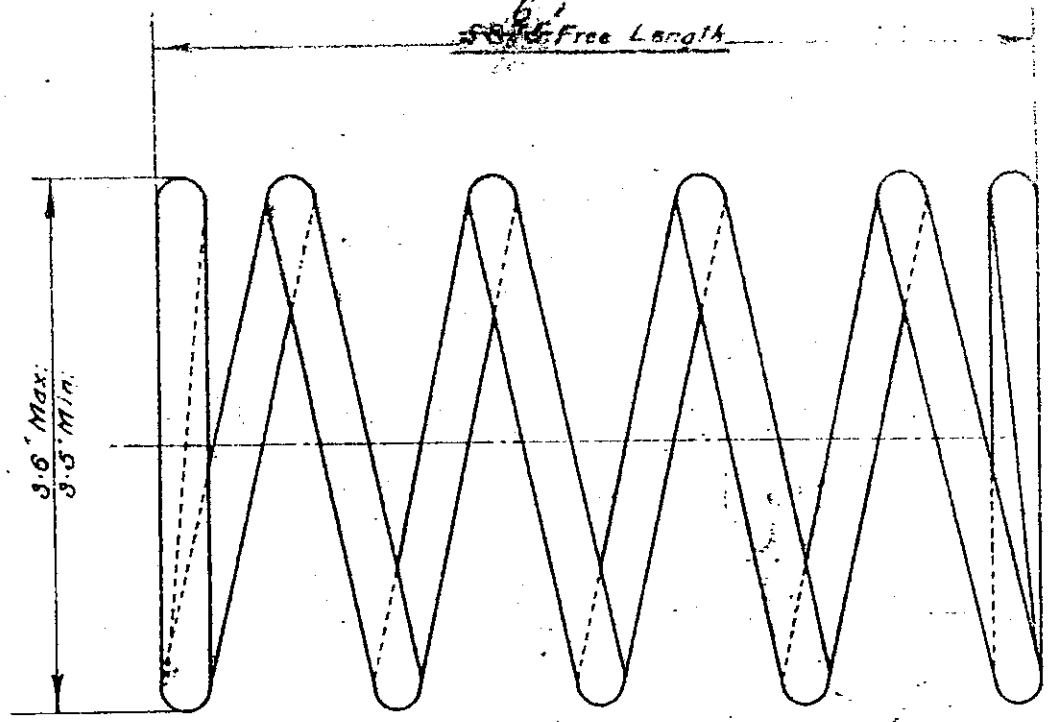

~~5 Coils~~ Y O. S.W.G. ~~Rate 89 lbs~~ 22-4-20

~~4½ Coils Free Coils~~ [illegible]

Rate 100 lbs. to 105 lbs. per 1"

[illegible] 179-8	[illegible] SPRING	DRAWN BY	R.W.
[illegible]		TRACED BY	[illegible]
[illegible]		CHECKED BY	
		PASSED BY	[illegible]
		DATE 10-2-19	

H245

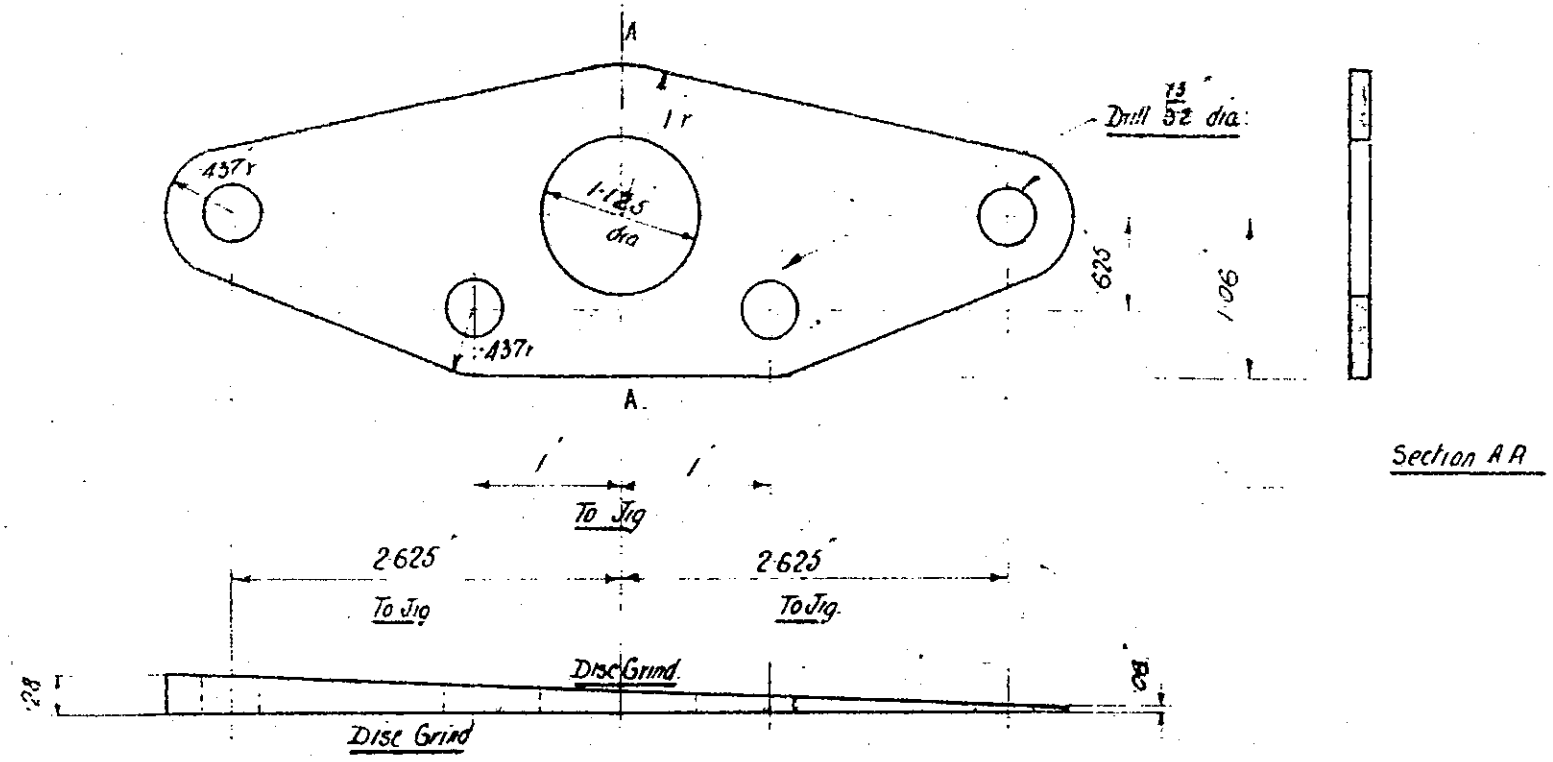

DRAWING No. JSO – S	CHANGE SPEED BOX WEDGE	DRAWN BY	F.C.
MATERIAL AL. CASTG.		TRACED BY	M.B.
HEAT TREATMENT		CHECKED BY	[illegible]
		PASSED BY	[illegible]
		DATE 10. 2. 19.	

H256

M/c upside down

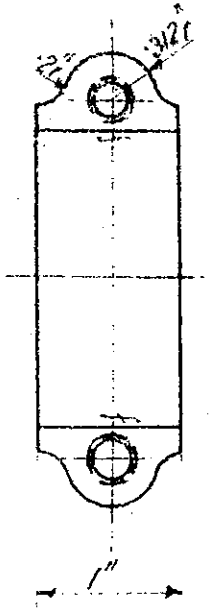

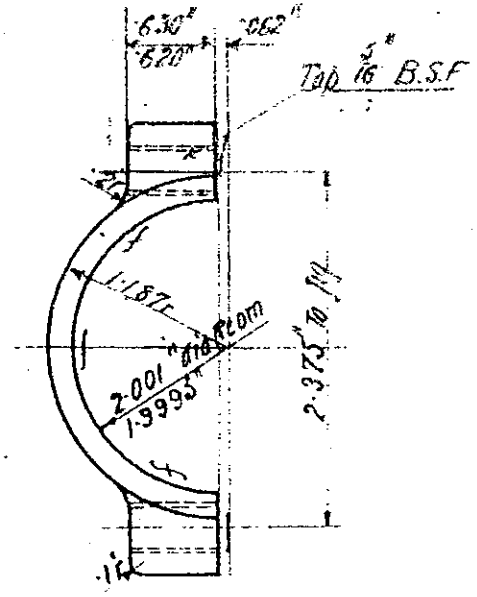

TO BE M/c WITH H257

DRAWING Nº. IS2-S	PETROL TANK SUPPORT CAP	DRAWN BY	G.W.
MATERIAL. M.I		TRACED BY	S.H.H
HEAT TREATMENT.		CHECKED BY	
		PASSED BY	
		DATE 14·2·19	

H257

M/c where marked ✓

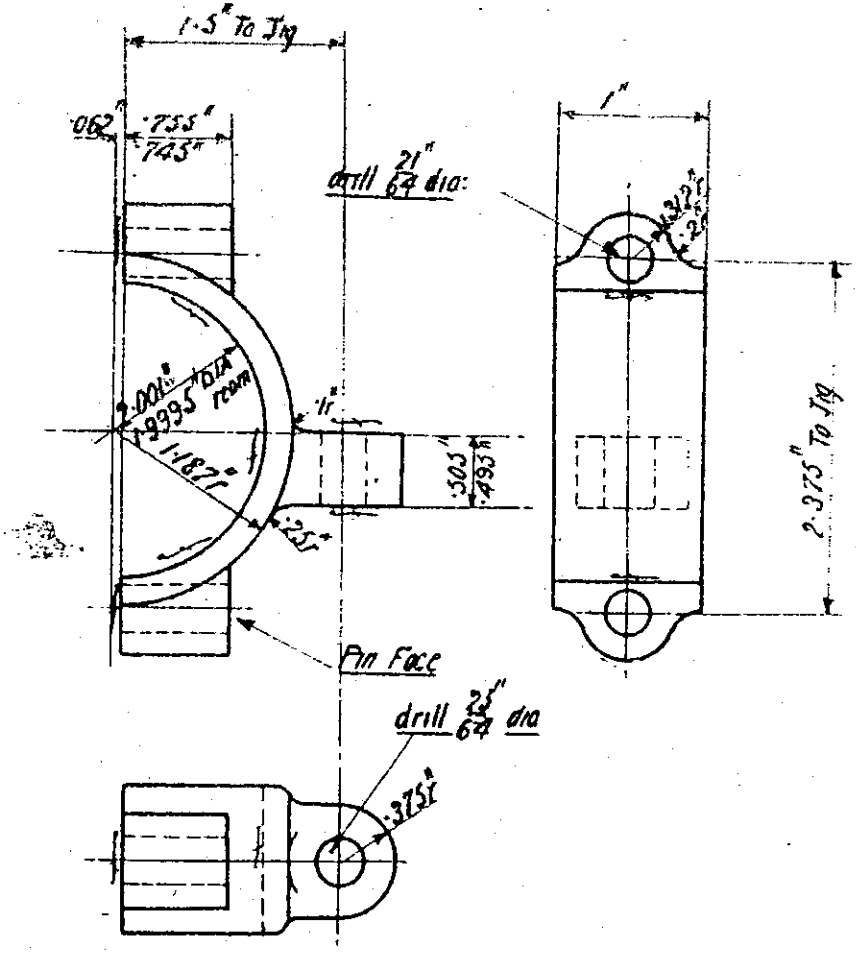

DRAWING No.	82-S.
MATERIAL.	M.1
HEAT TREATMENT.	

PETROL TANK SUPPORT

DRAWN BY	C.W
TRACED BY	S.H.H
CHECKED BY	
PASSED BY.	
DATE	14-2-19

H269

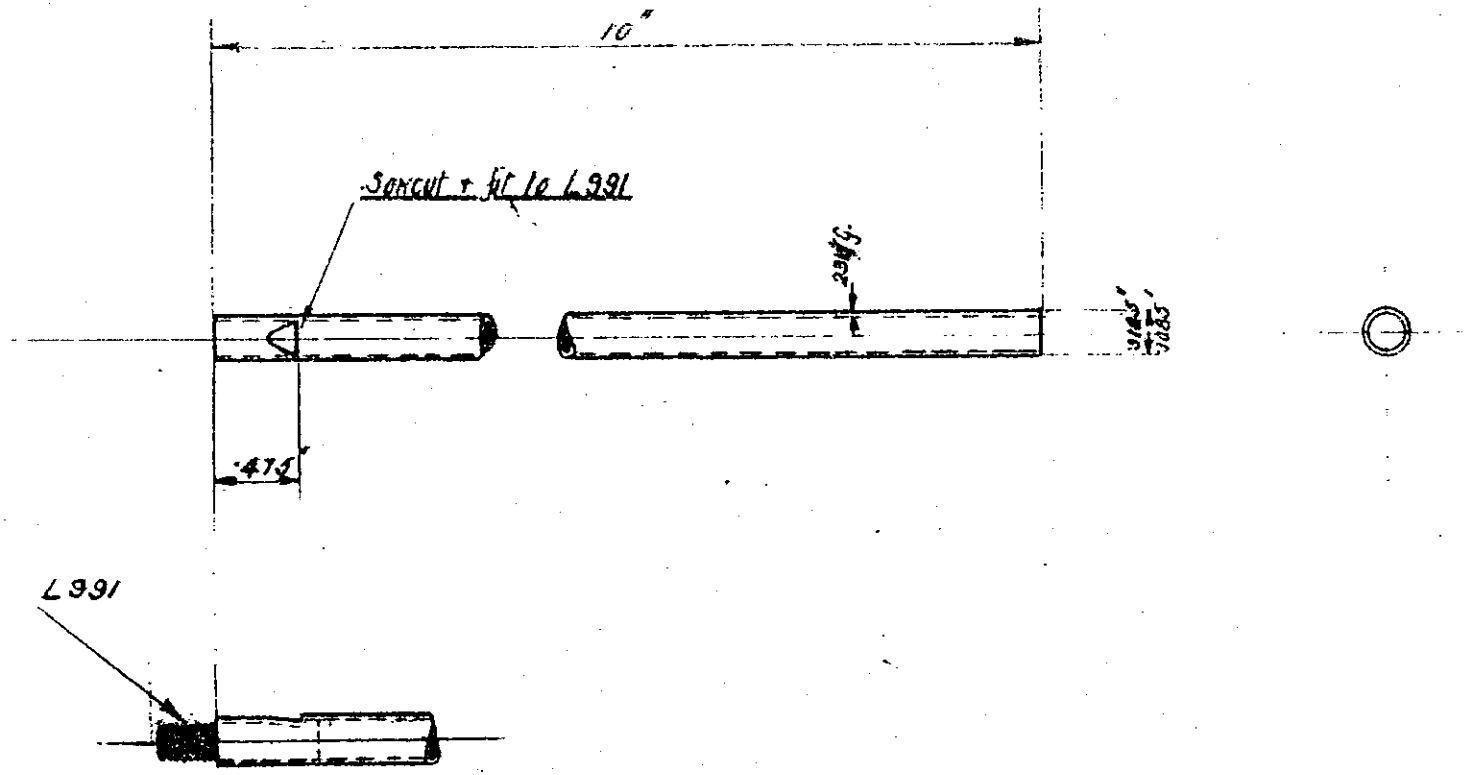

Redrawn 28-7-20

DRAWN BY	RPH
TRACED BY	RHL
CHECKED BY	[illegible]
PASSED BY	[illegible]
DATE	

DRAWING No. 205-S

MATERIAL. W. S. T

CARBURETTER SLIDING TUBE

H293

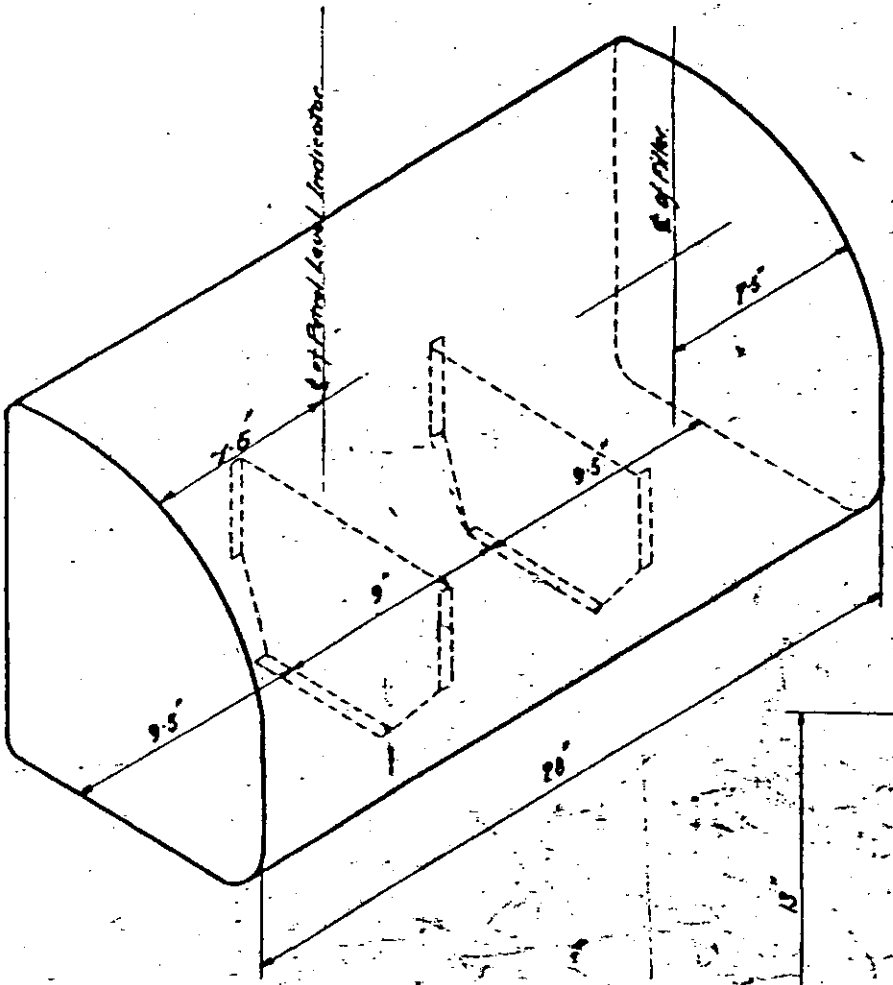

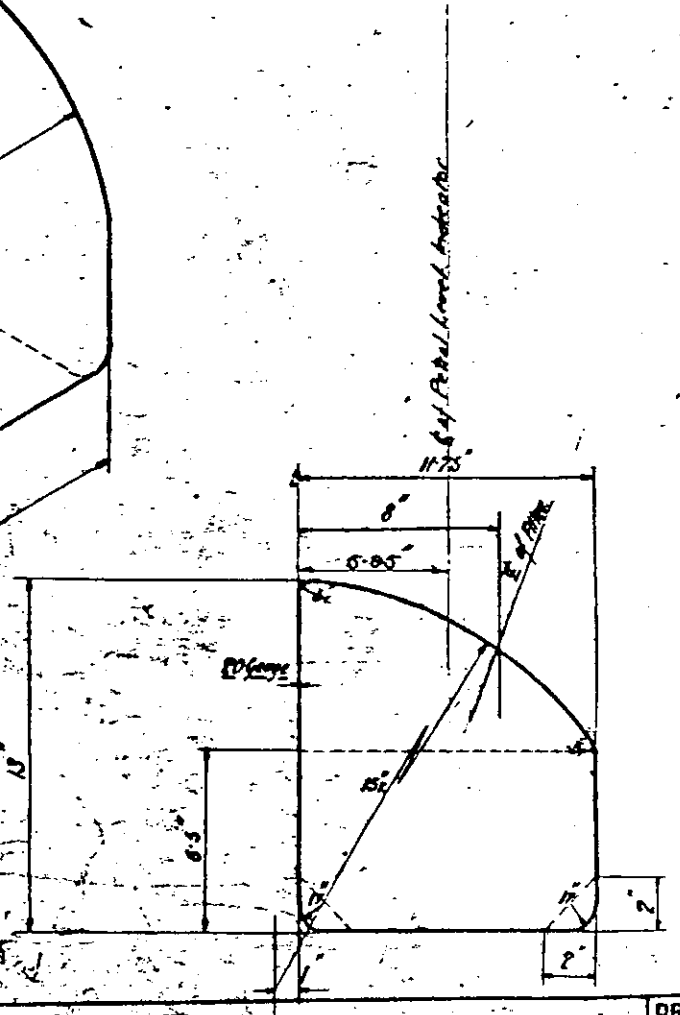

DRAWING No. 251 – 4

MATERIAL. TINNED IRON.

HEAT TREATMENT.

PETROL TANK (CAPACITY 11 GALLS)

DRAWN BY	S.H.
TRACED BY	S.H.
CHECKED BY	
PASSED BY	
DATE 27- 8- 19	

H294.

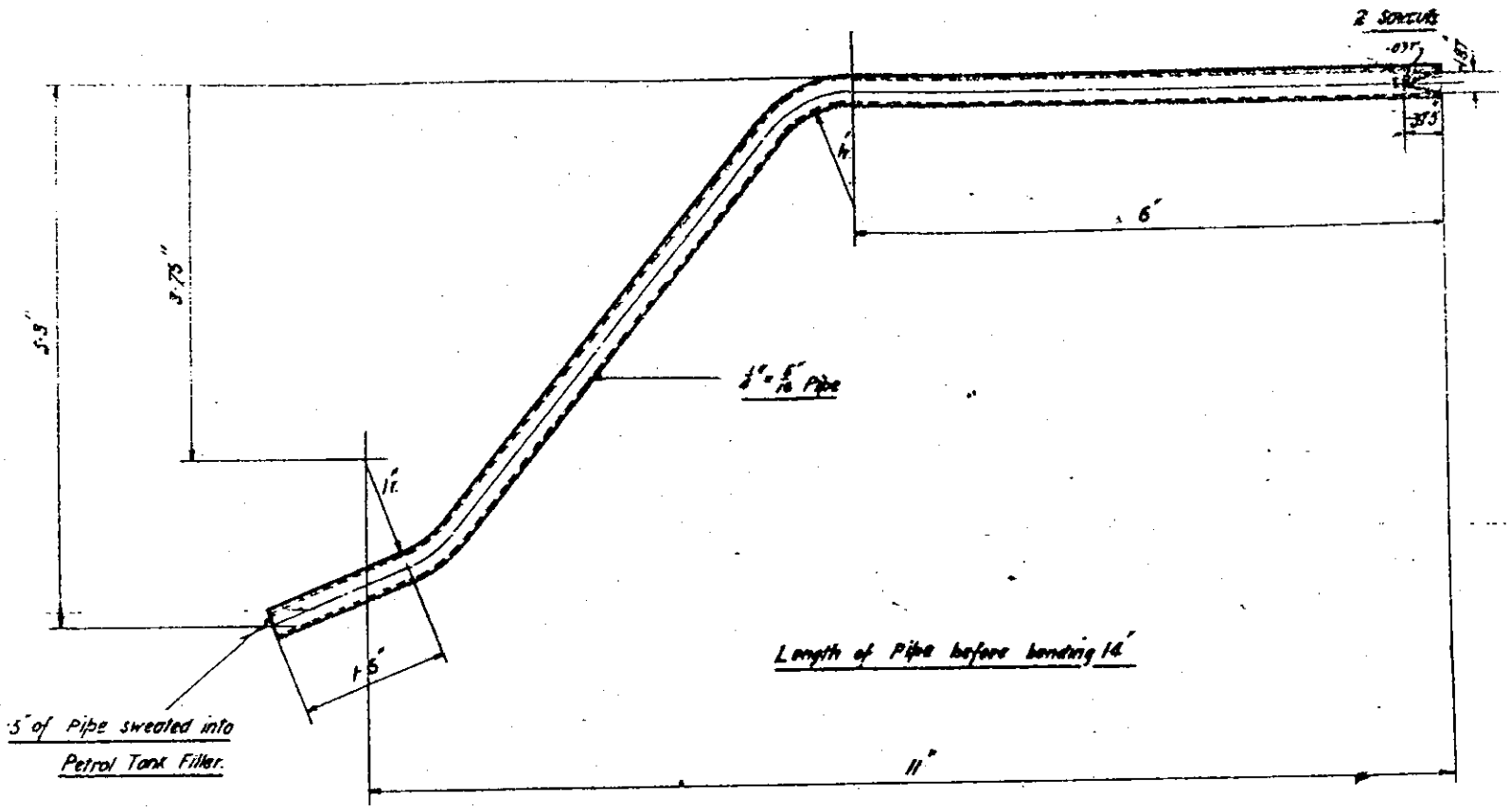

DRAWING No. 252 – 4

MATERIAL. C.U. PIPE.

HEAT TREATMENT.

PETROL FEED PIPE

DRAWN BY	S.H.
TRACED BY	S.H.
CHECKED BY	
PASSED BY	
DATE 27- 8 - 13	

H306

M/c all over

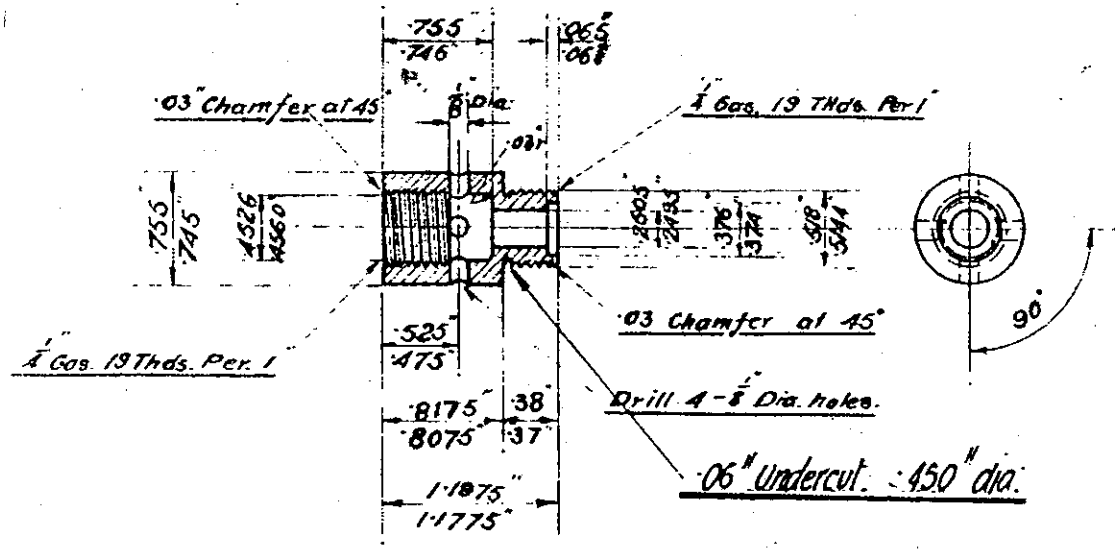

DRAWING No. 201 – S	AIR RELIEF VALVE SEAT
MATERIAL. H.D.B.	
HEAT TREATMENT.	

DRAWN BY	E.W.H.
TRACED BY	K.L.R.
CHECKED BY	
PASSED BY	H.
DATE 3-3-19.	

H327

Mic all over

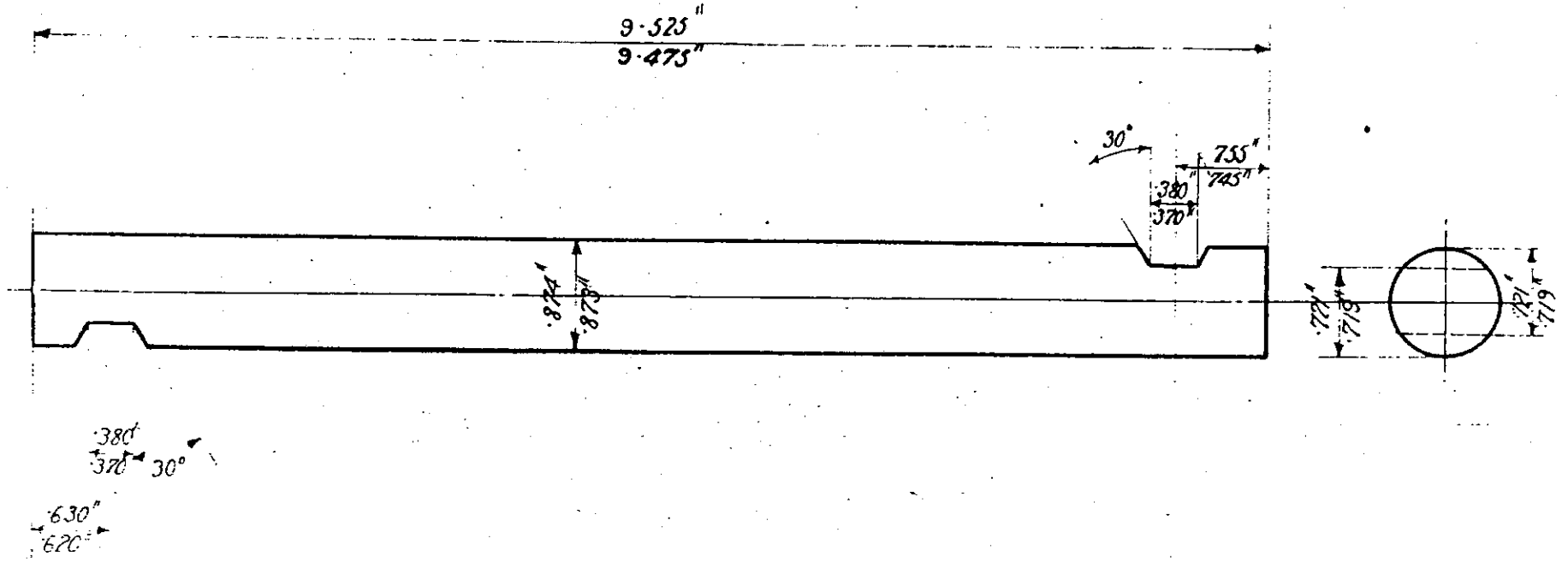

DRAWING No. 199–S	
MATERIAL. B.D.S.	
HEAT TREATMENT.	

HANDBRAKE LEVER SHAFT

DRAWN BY	SHH
TRACED BY	SHH
CHECKED BY	
PASSED BY	
DATE 4-3-19	

H 336

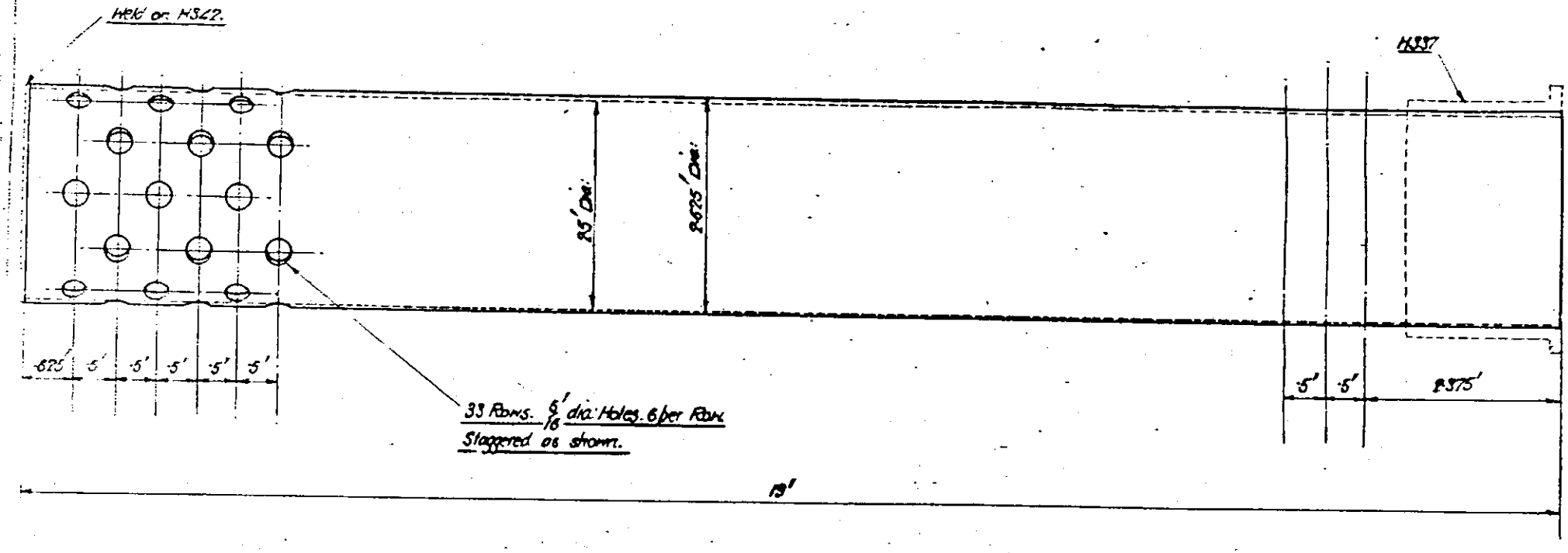

DRAWING No. 253-4.
MATERIAL. W.S.T.
HEAT TREATMENT.

SILENCER TUBE

DRAWN BY	E.N.H.
TRACED BY	
CHECKED BY	
PASSED BY	
DATE 25-4-19.	

H33S

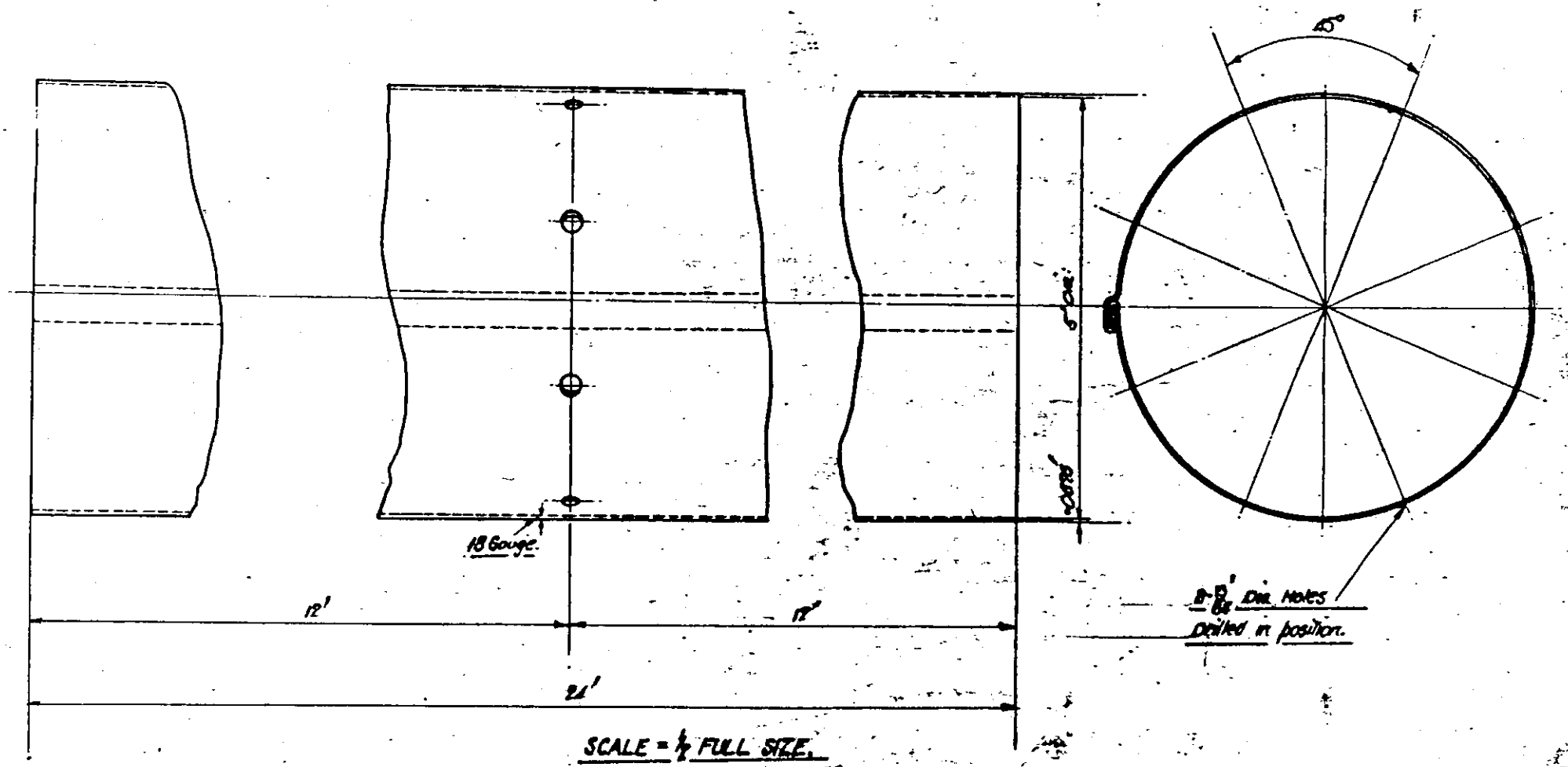

DRAWING Nº. 256-4.
MATERIAL. CHARCOAL IRON.
HEAT TREATMENT.

SILENCER OUTER SHELL

DRAWN BY	K.K.K.
TRACED BY	
CHECKED BY	
PASSED BY	
DATE 5-3-19.	

H340

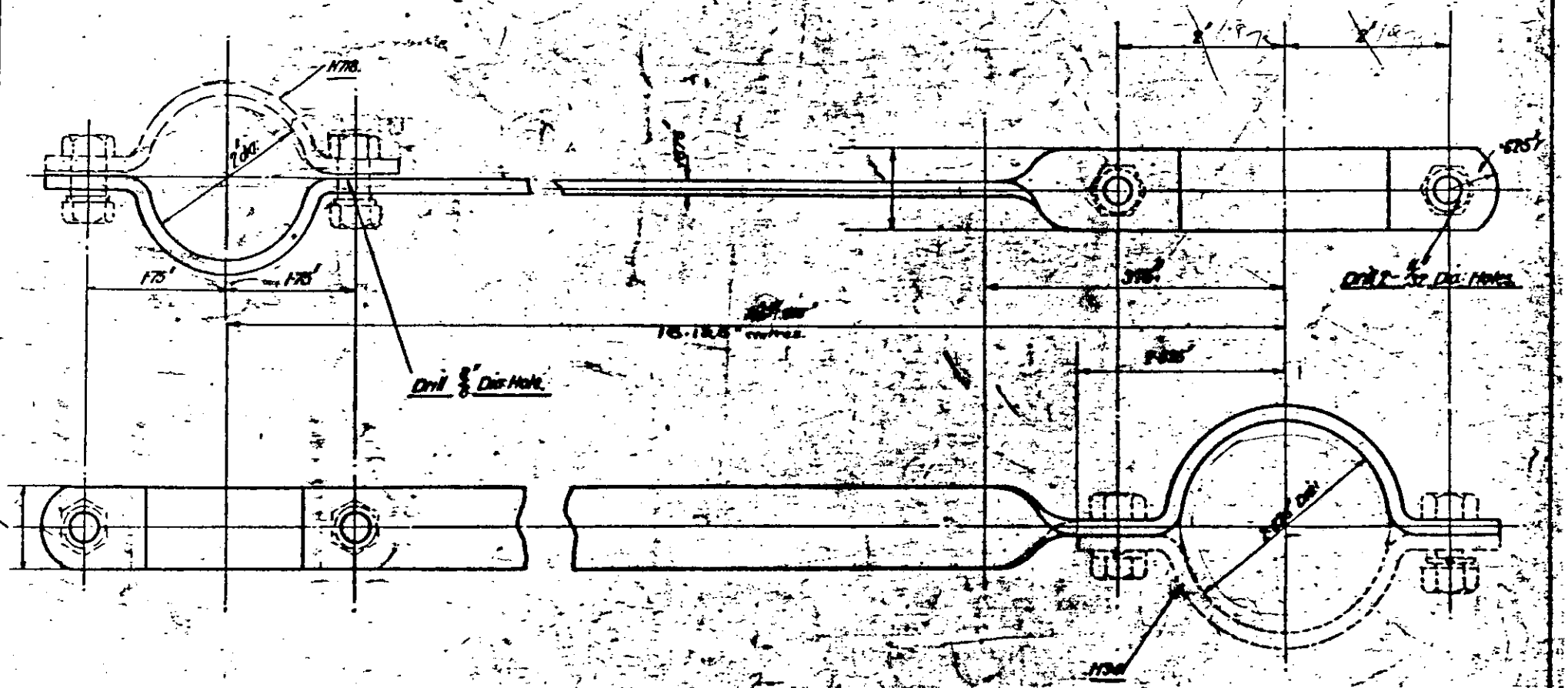

DRAWING No 254-S.
MATERIAL. M.S.
HEAT TREATMENT.

EXHAUST PIPE STAY.

DRAWN BY	E.K.J.
TRACED BY	
CHECKED BY	
PASSED BY	
DATE 26-3-19.	

H347

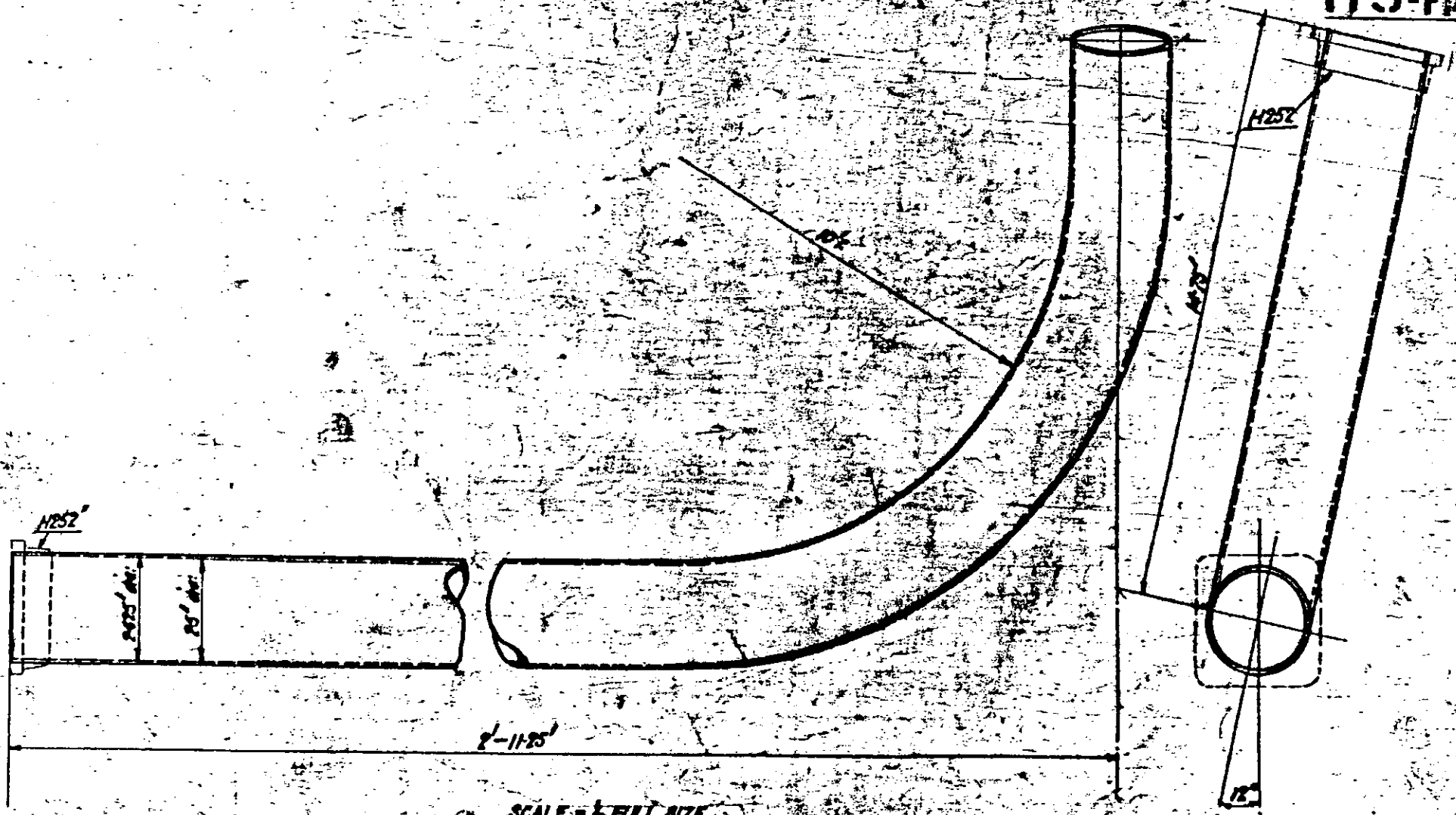

DRAWING No. 257-4.
MATERIAL W.S.T.
HEAT TREATMENT

EXHAUST PIPE FROM ENGINE TO SILENCER.

DRAWN BY EWJ
TRACED BY
CHECKED BY
PASSED BY
DATE 8-3-19.

H34S

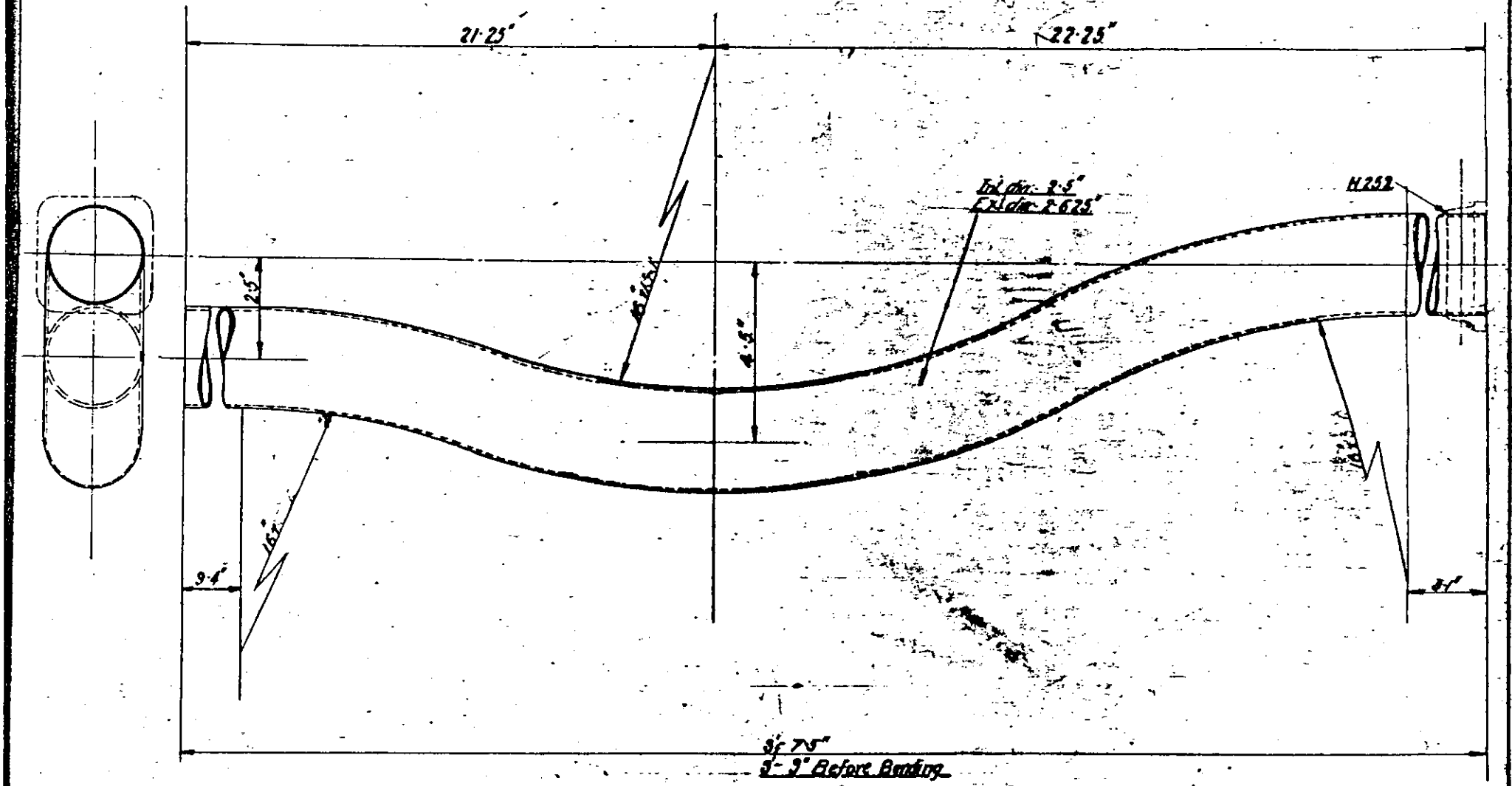

DRAWING No. 255-4	EXHAUST PIPE FROM SILENCER	DRAWN BY RE
MATERIAL. W. S. T.		TRACED BY REA
HEAT TREATMENT.		CHECKED BY
		PASSED BY
		DATE 10-7-19

H357

M/c All Over

Screw 5/16" Whit 18 thds per I

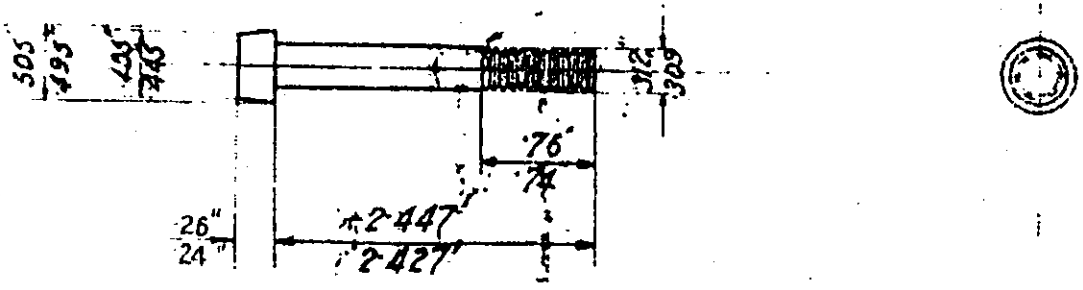

DRAWING No. 331 — S	ENGINE SPRING CENTRE BOLT	DRAWN BY
MATERIAL M. S.		TRACED BY
HEAT TREATMENT.		CHECKED BY
		PASSED BY
		DATE

H35S

M/c All Over

Screw 5/8 Whit 18 thds per"

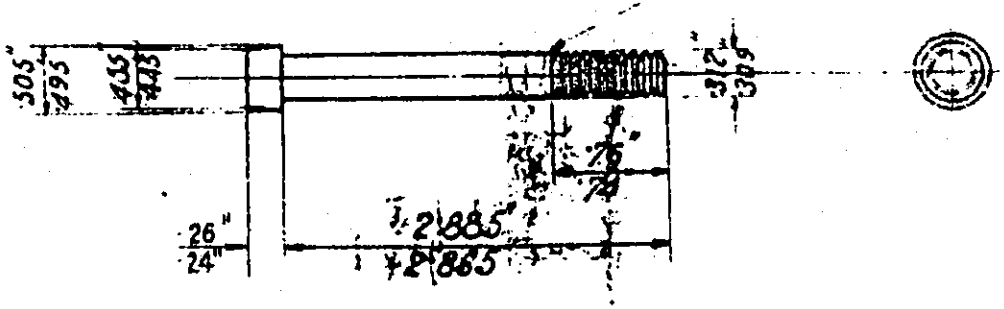

DRAWING No. 3331 — 5	SPRING CENTRE BOLT	DRAWN BY
MATERIAL M.S		TRACED BY
HEAT TREATMENT		CHECKED BY
		PASSED BY
		DATE

H 370

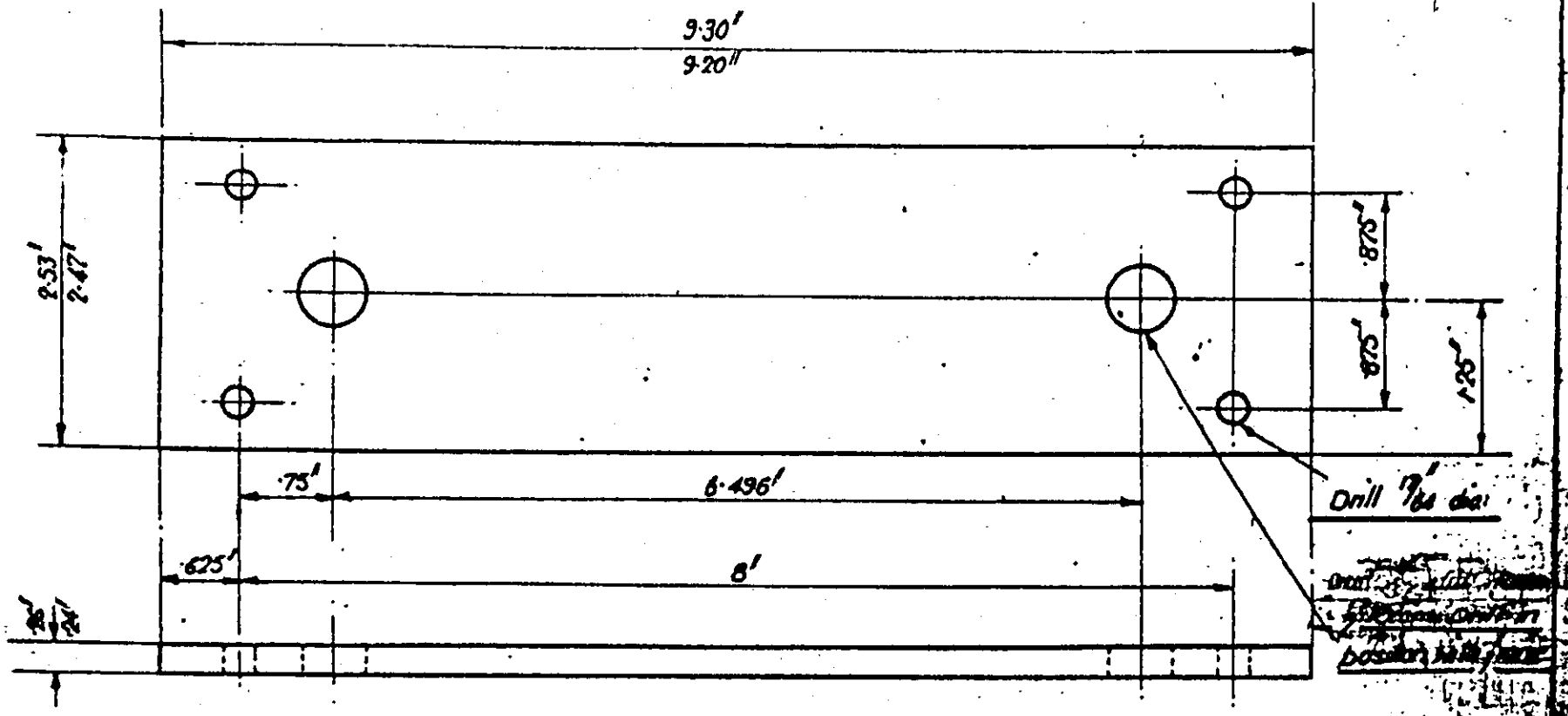

338—S

M. S.

FRAME PLATE FRONT

H 371

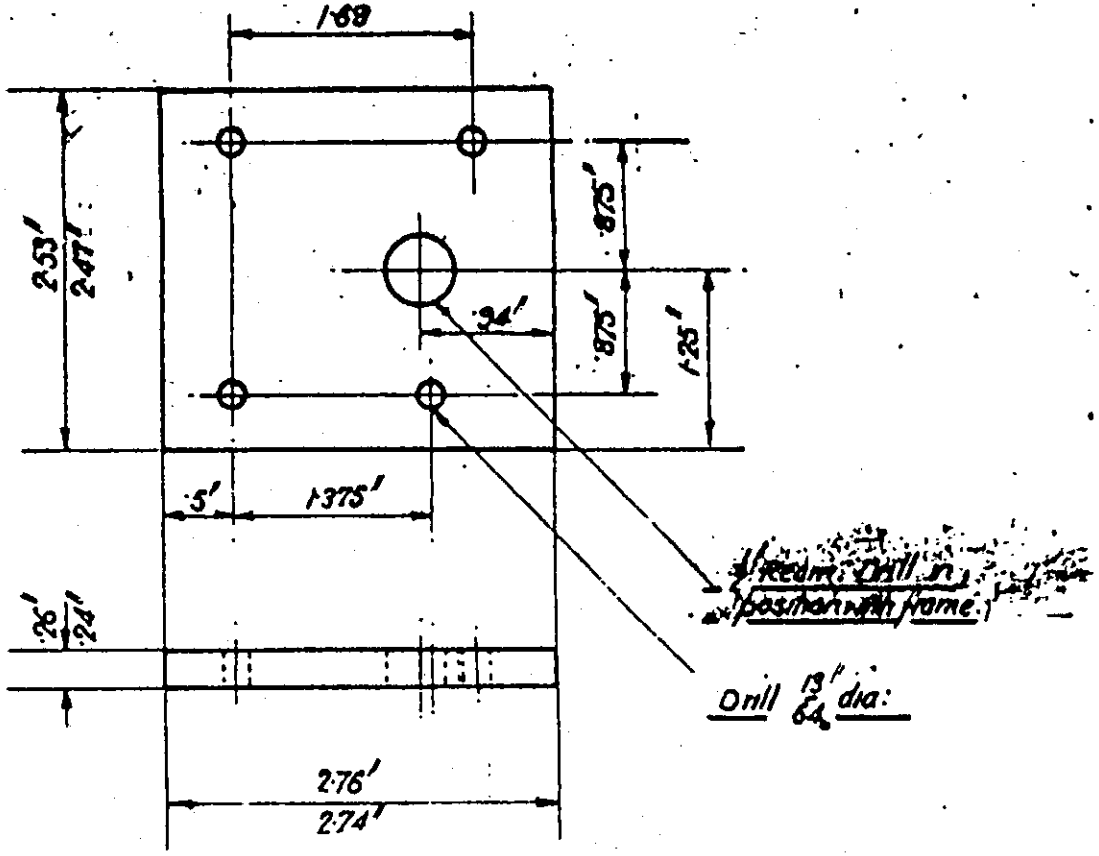

DRAWING No. 33S – S.	FRAME PLATE REAR.	DRAWN BY F.W.
M. S.		TRACED BY
		CHECKED BY
		PASSED BY
		DATE 12-3-13.

H41-02

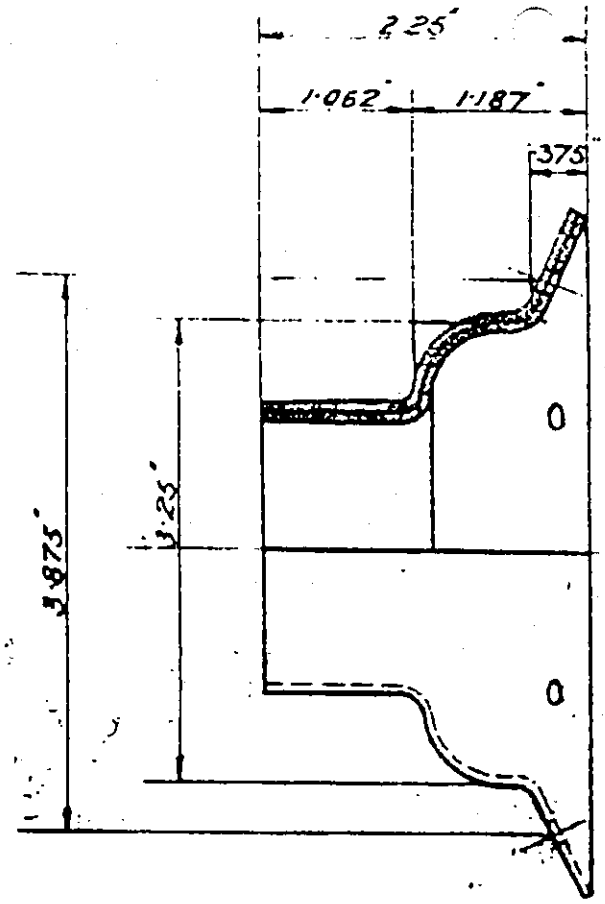

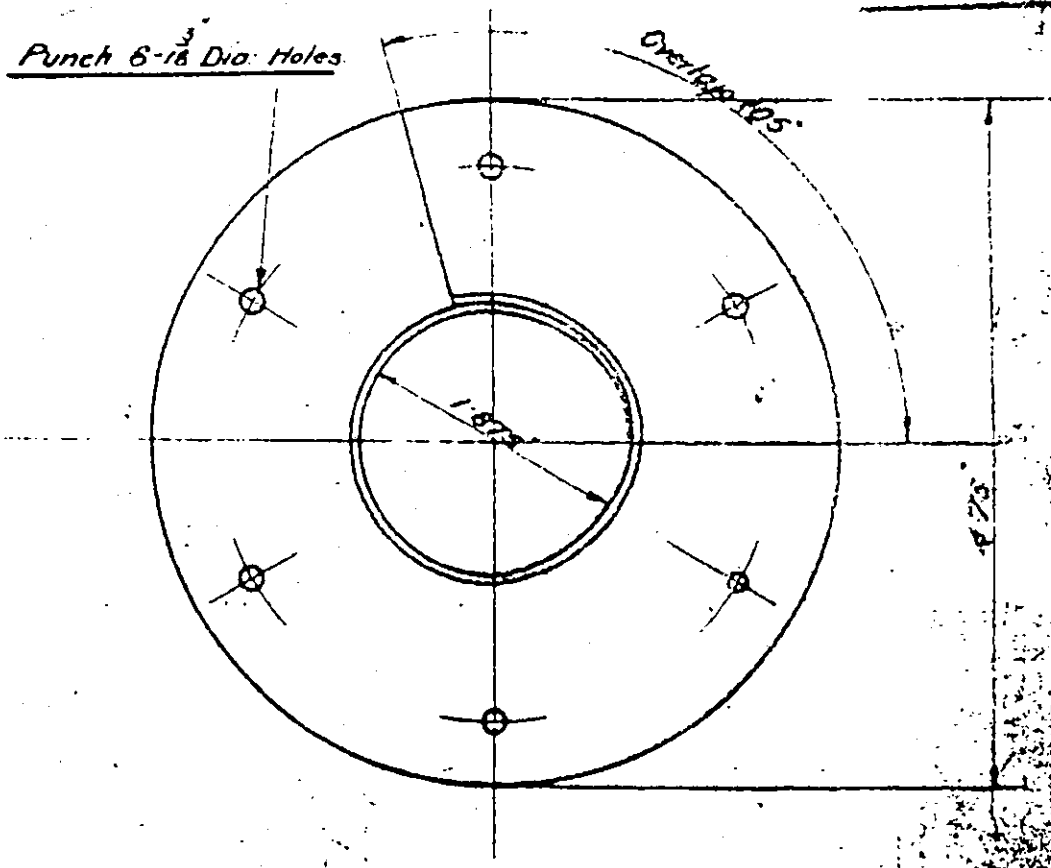

DRAWING No. 345-S

MATERIAL LEATHER

HEAT TREATMENT

UNIVERSAL JOINT DUST COVER

H412

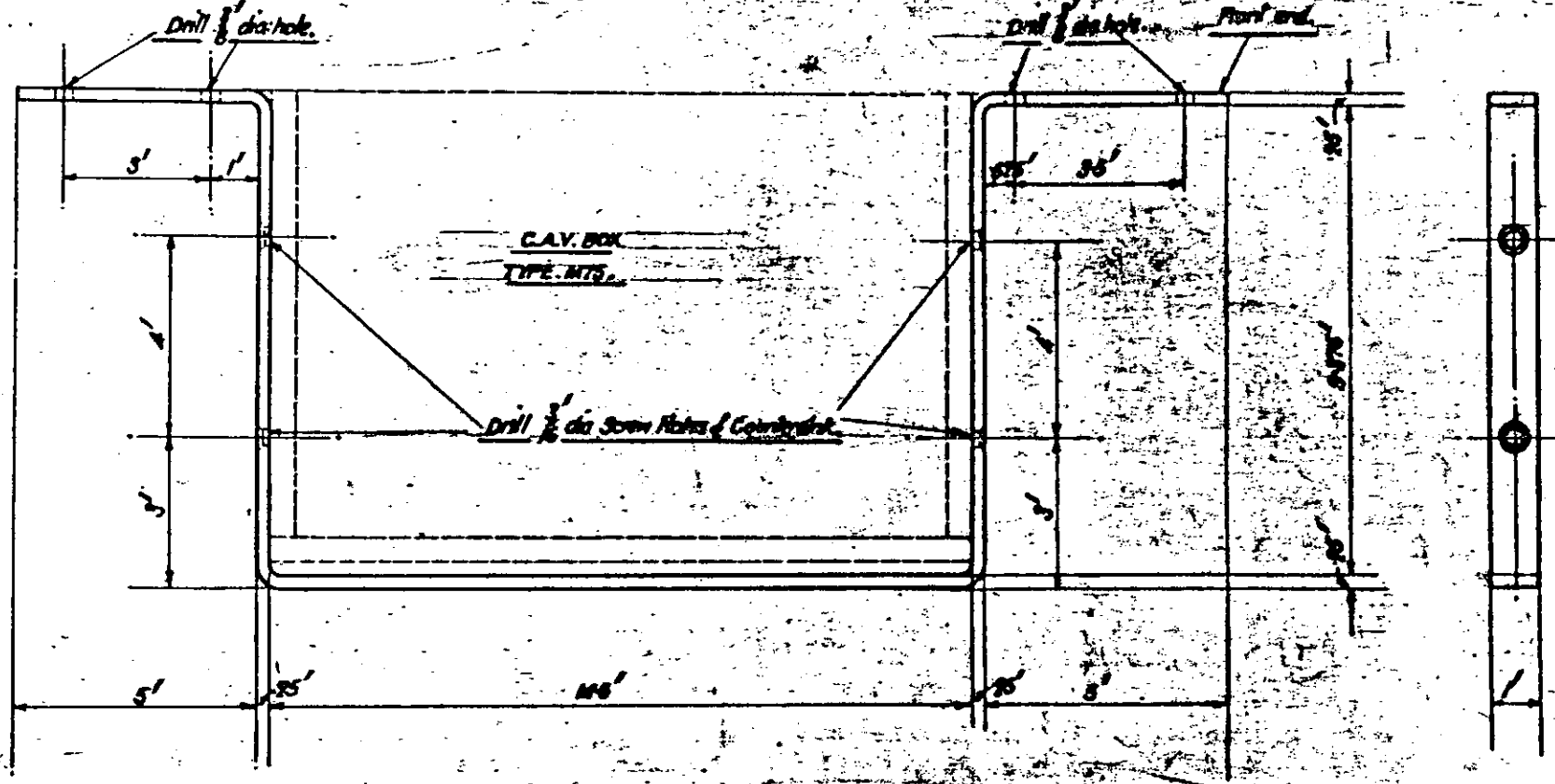

SCALE ½ FULL SIZE.

258

DRAWING No. 258 — 4	STRAP FOR BATTERY BOX	DRAWN BY
MATERIAL M.S.		TRACED BY
HEAT TREATMENT		CHECKED BY
		PASSED BY
		DATE 8/3/42

H413

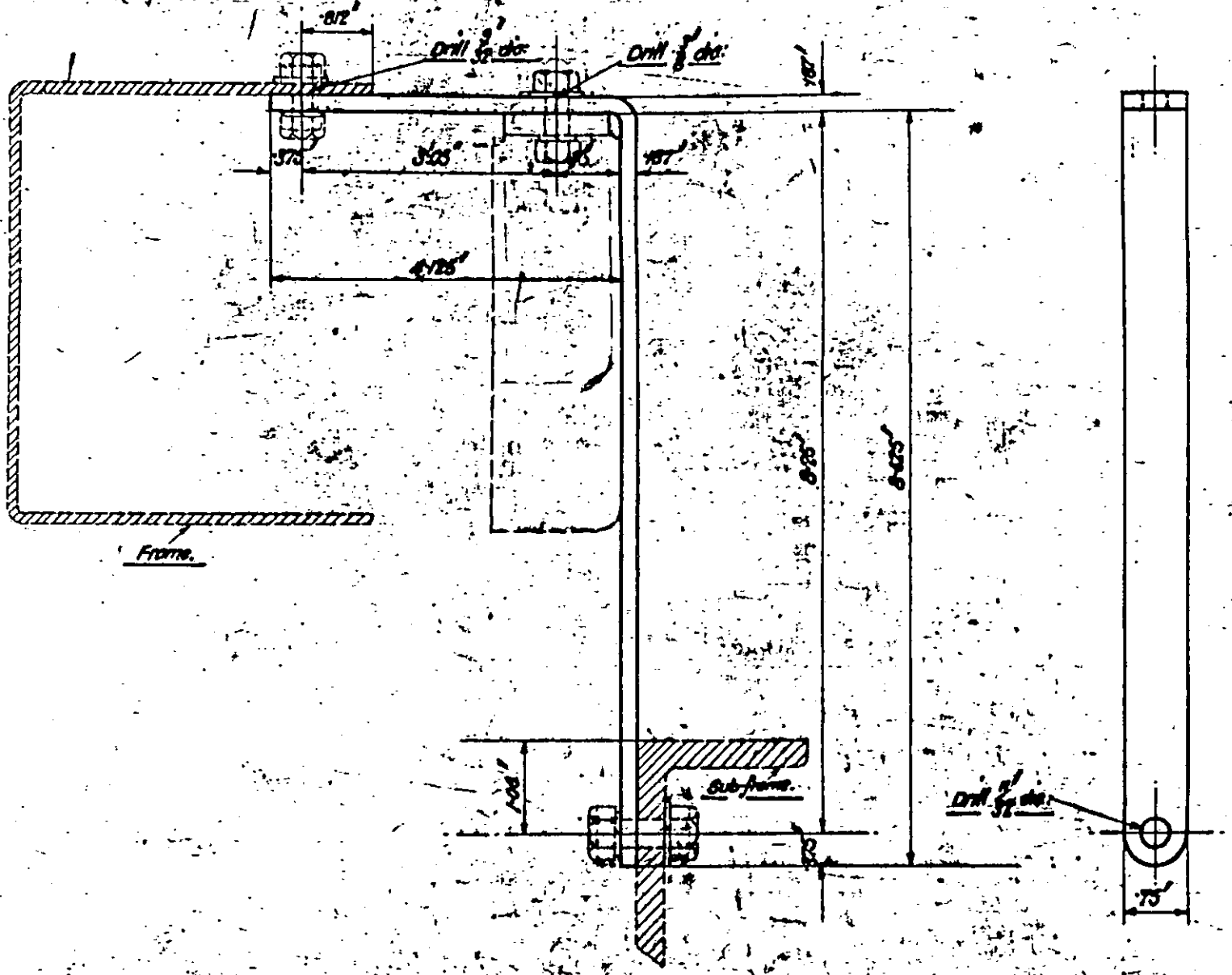

DRAWING No. 259-4	BRACKET FOR SELF STARTER FOOT SWITCH	DRAWN BY	E.W.M.
MATERIAL. M. S.		TRACED BY	[illegible]
HEAT TREATMENT.		CHECKED BY	[illegible]
		PASSED BY	[illegible]
		DATE	[illegible]

H415

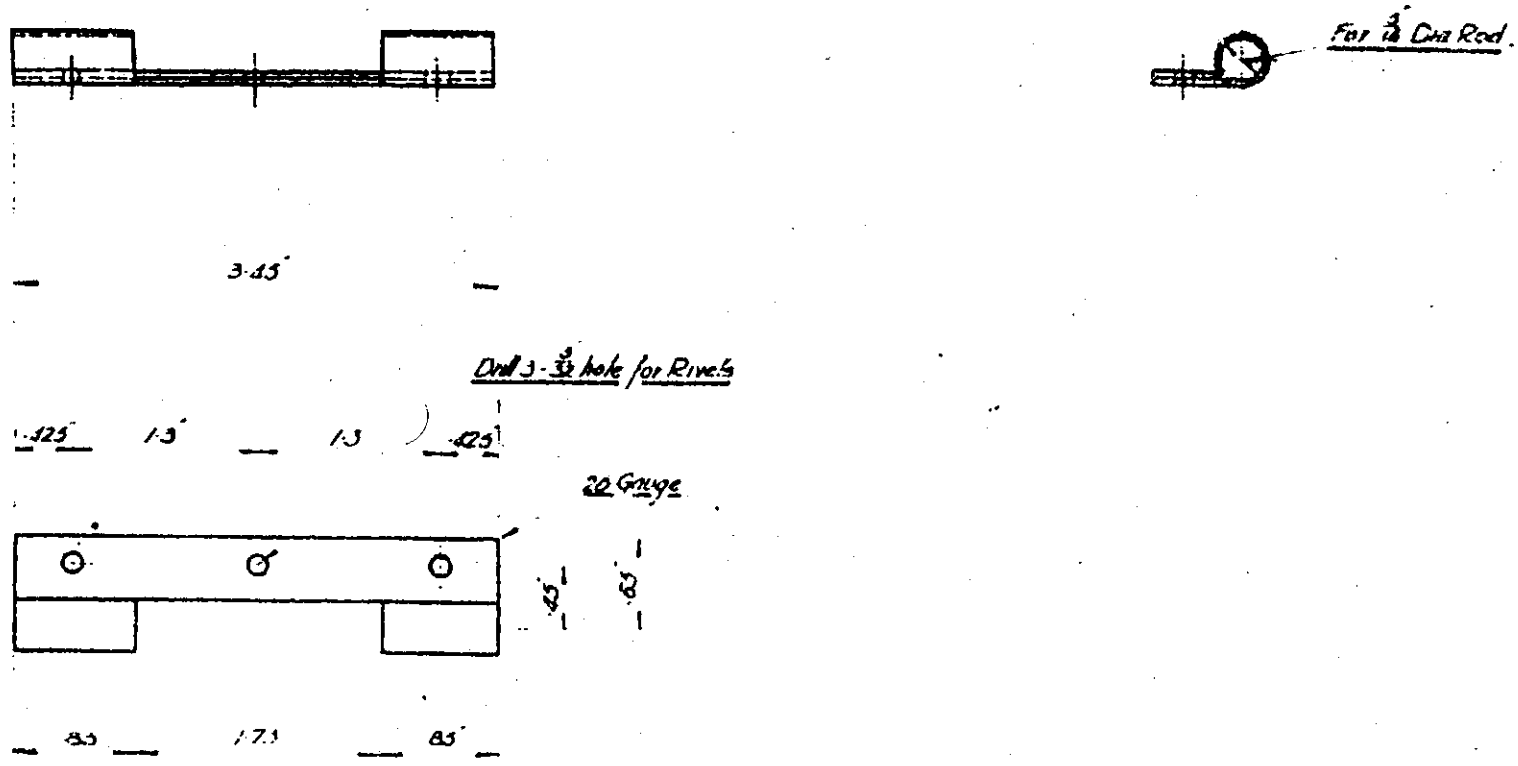

DRAWING No. 417 - S	TOP END BONNET HINGE (FEMALE)	DRAWN BY
MATERIAL GERMAN SILVER		TRACED BY
HEAT TREATMENT.		CHECKED BY
		PASSED BY
		DATE

H416

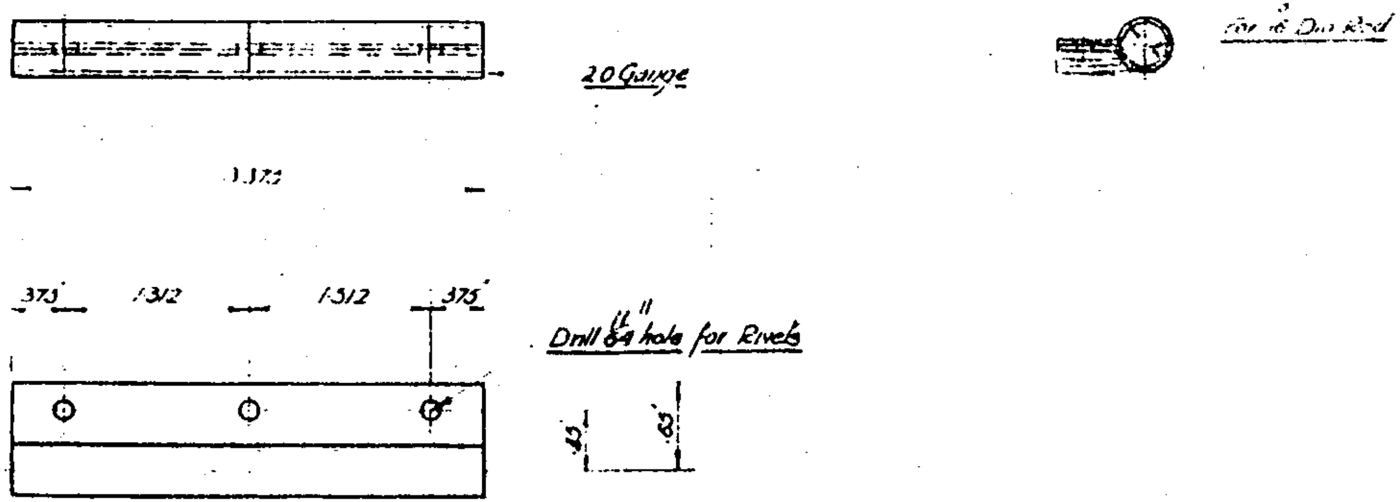

DRAWING No. 417 - S	TOP BONNET HINGE	DRAWN BY	
MATERIAL GERMAN SILVER		TRACED BY	
HEAT TREATMENT.		CHECKED BY	
		PASSED BY	
		DATE 1-4-19	

H420

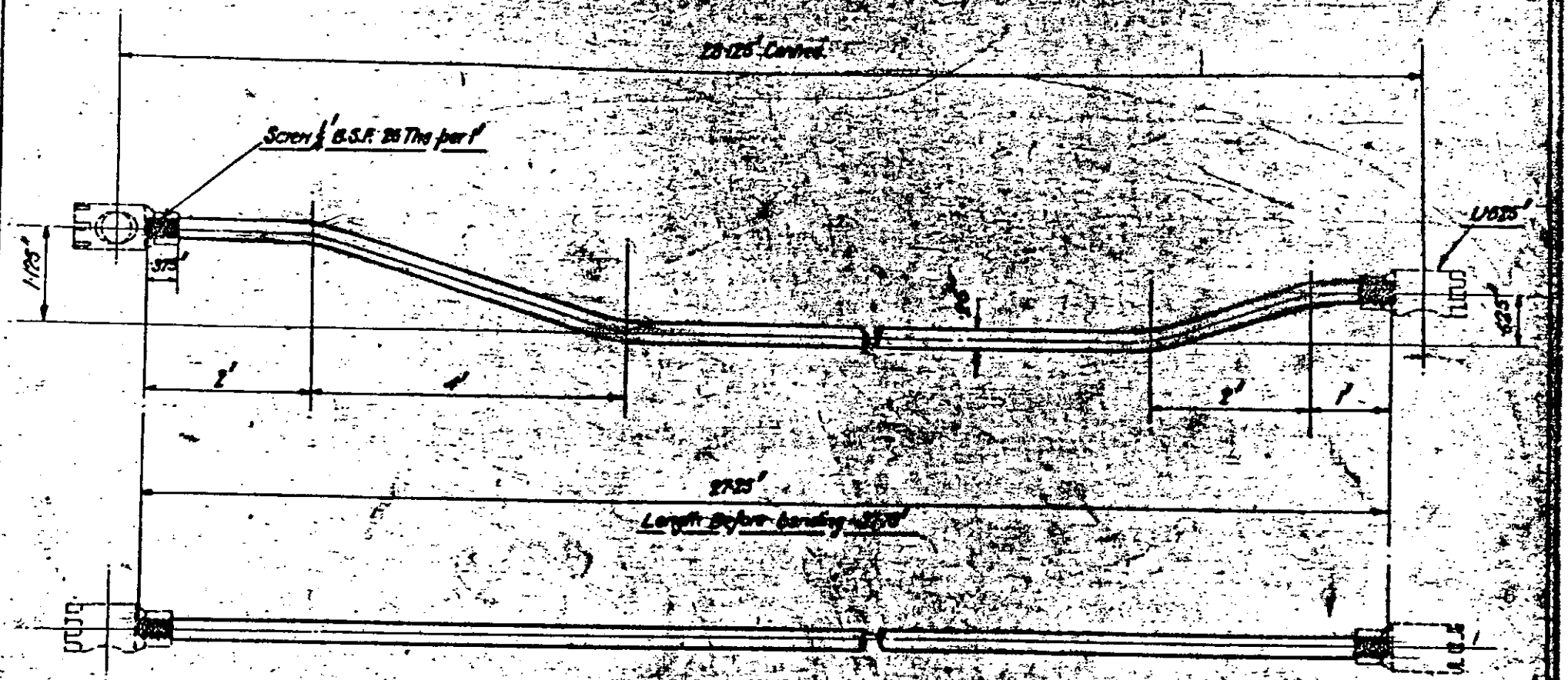

DRAWING No. 260—A

MATERIAL B. D. S.

HEAT TREATMENT

CONTROL ROD

DRAWN BY
TRACED BY
CHECKED BY
PASSED BY
DATE

H434.

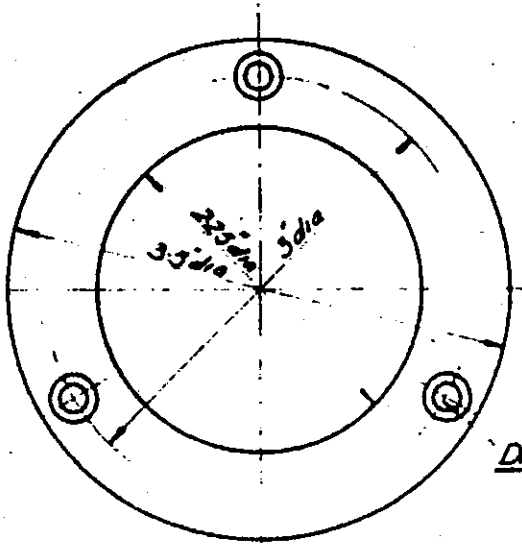

Drill 3- 11/32 Csk holes

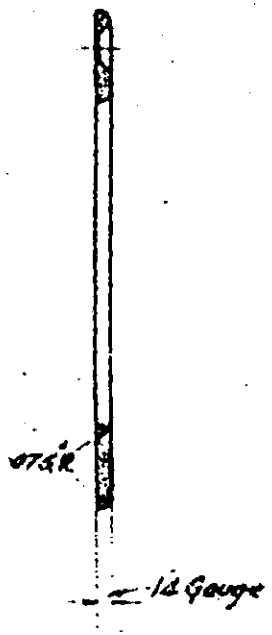

To be Black Plated

DRAWING No. 334-S

MATERIAL BRASS

HEAT TREATMENT

OIL SAIR PRESSURE GAUGE FLANGE.

DRAWN BY	
TRACED BY	
CHECKED BY	
PASSED BY	
DATE 4-4-19	

H432

H 432

V 5465

AL. FORG. Y. ALLOY.

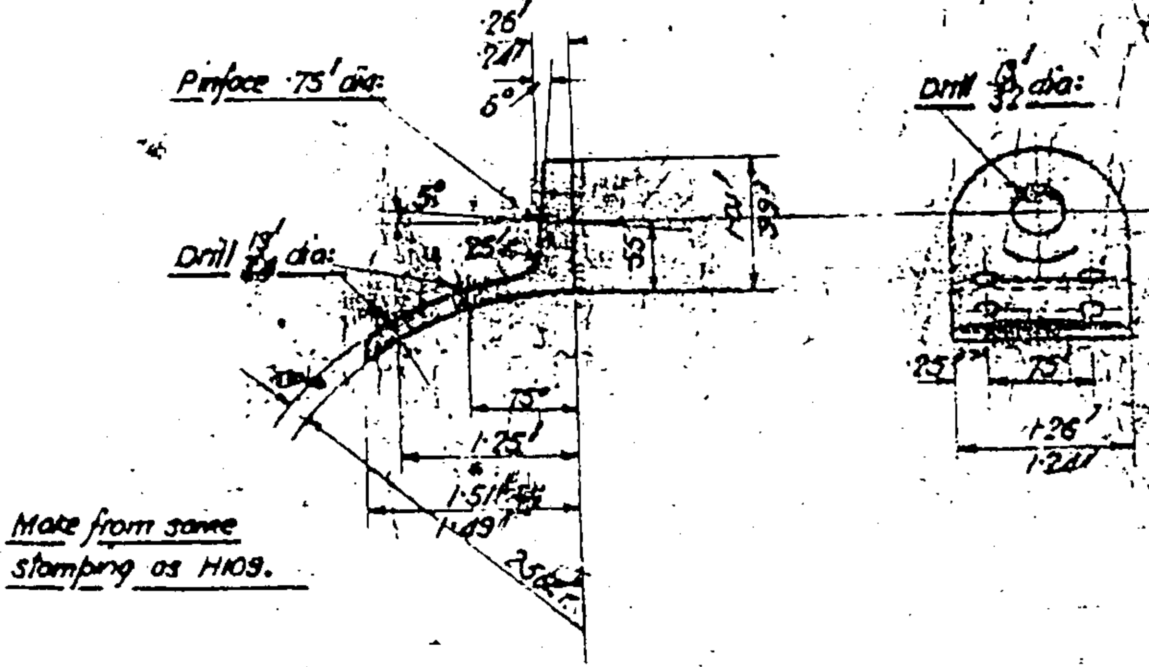

FORGING No. 424 - S.	STRAP END.	DRAWN BY
MATERIAL M.S. 24E-3...		TRACED BY
HEAT TREATMENT "R"		CHECKED BY
		ISSUED BY
		DATE

H 446

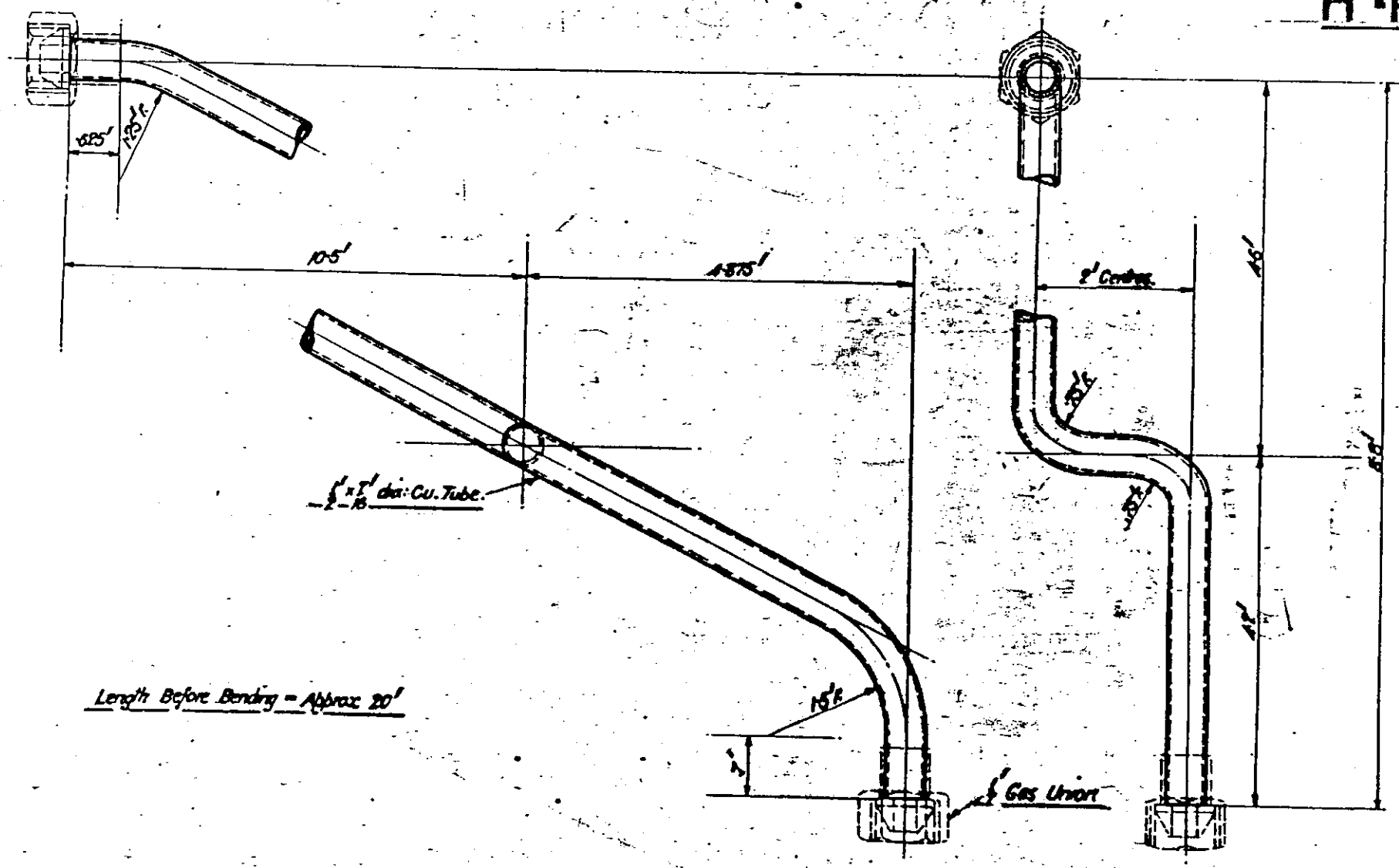

DRAWING No. 262-4.
MATERIAL. CU. TUBE
HEAT. TREATMENT.

WATER HEATER OUTLET PIPE.

DRAWN BY	
TRACED BY	
CHECKED BY	
PASSED BY	
DATE 25-4-49	

H462

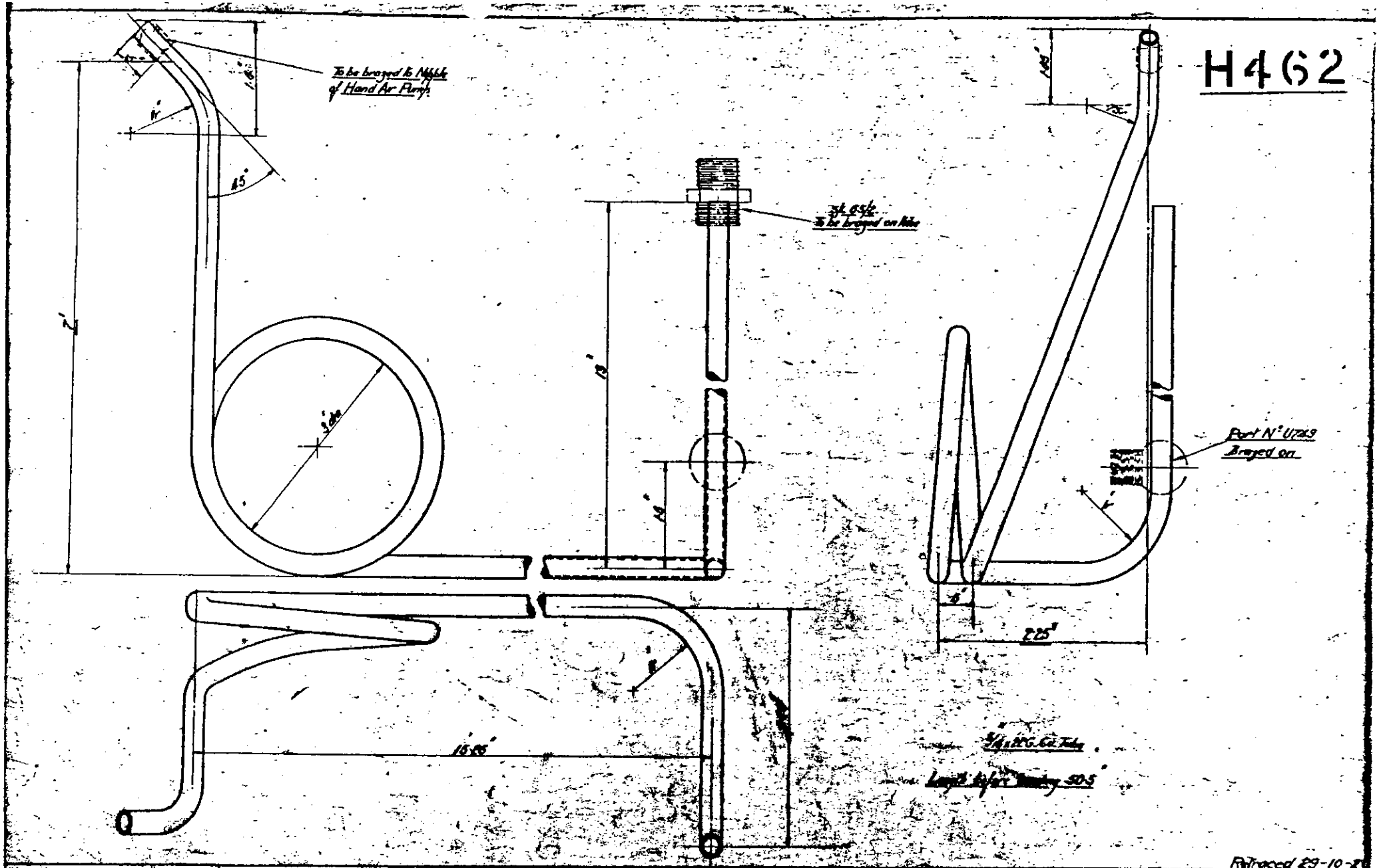

DRAWING NO.	261-41
MATERIAL	CU. TUBE
HEAT TREATMENT.	

HAND AIR PUMP PIPE.

Refaced 29-10-

DRAWN BY	
TRACED BY	
CHECKED BY	
PASSED BY	
DATE	14-5-1

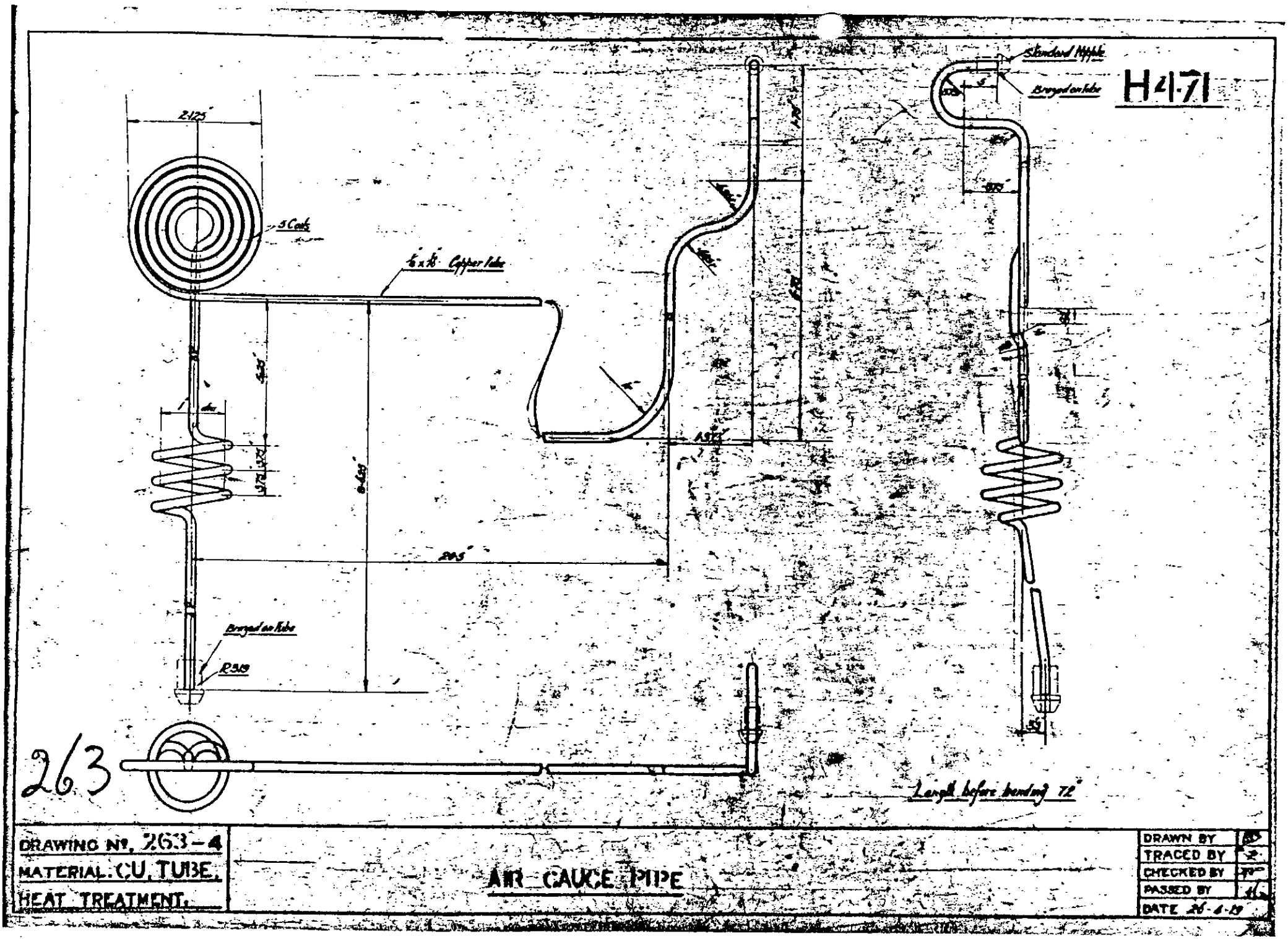

263

DRAWING Nº. 263-4
MATERIAL. CU. TUBE.
HEAT TREATMENT.

AIR GAUGE PIPE

DRAWN BY	
TRACED BY	
CHECKED BY	
PASSED BY	
DATE 26-4-19	

H4.72

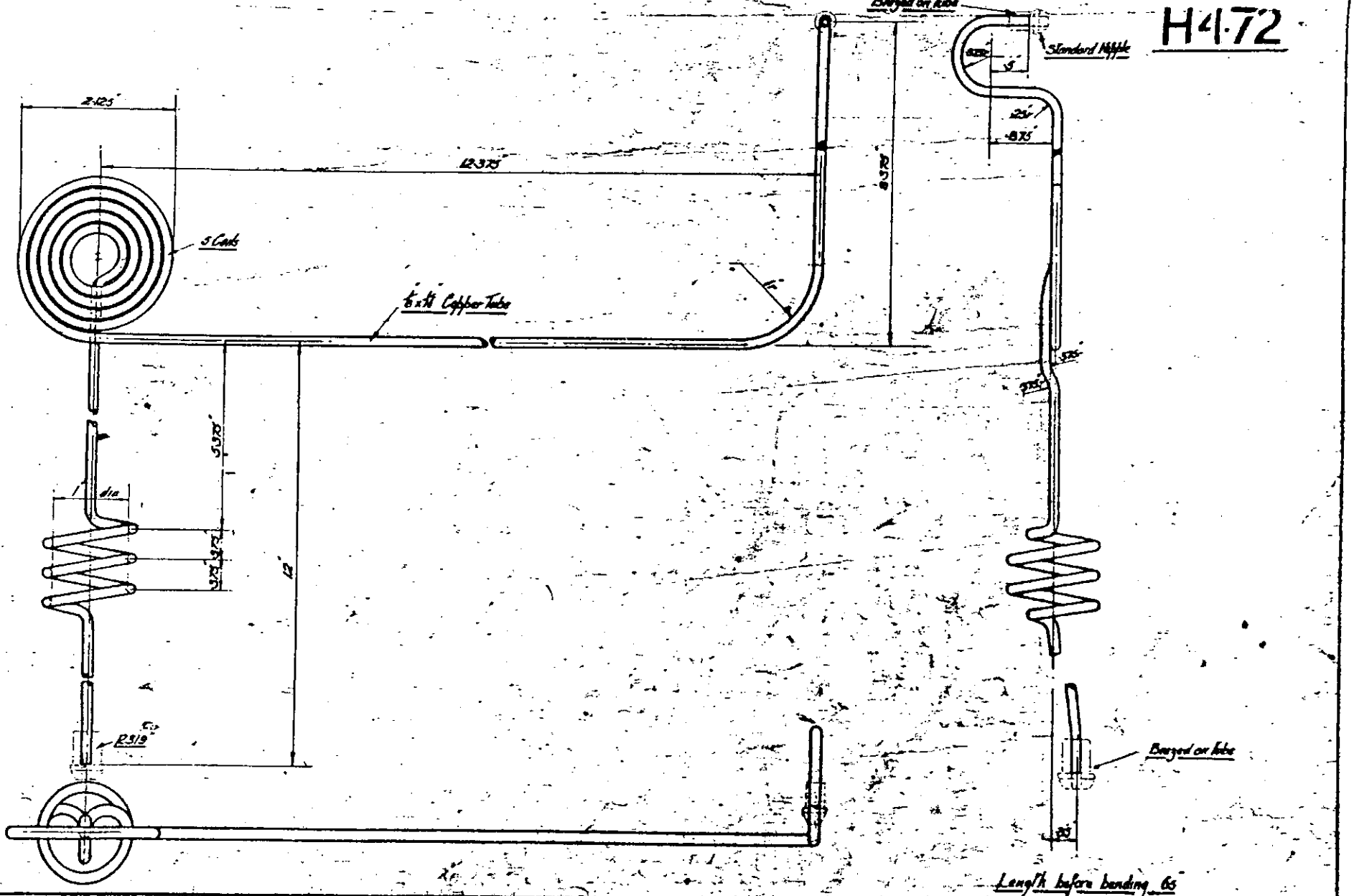

DRAWING No. 264-4

MATERIAL. CU TUBE

HEAT TREATMENT.

OIL GAUGE PIPE

DRAWN BY	
TRACED BY	
CHECKED BY	
PASSED BY	

H 474

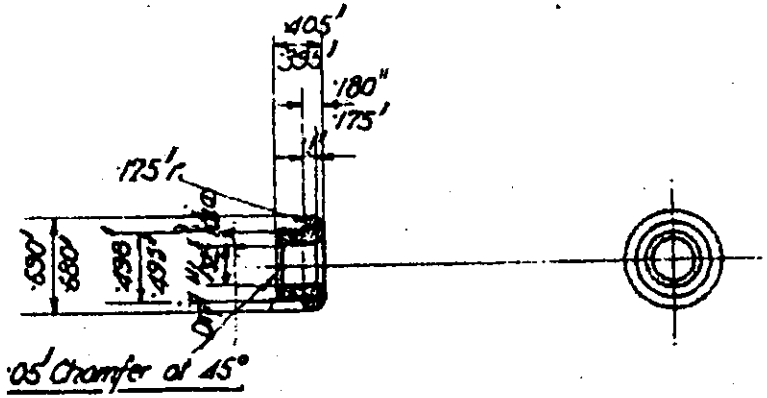

DRAWING No. 474—S.

MATERIAL

HEAT TREATMENT

LIGHTING WIRE BUSH.

DRAWN BY

TRACED BY

CHECKED BY

PASSED BY

DATE

H4·79

All file finish.

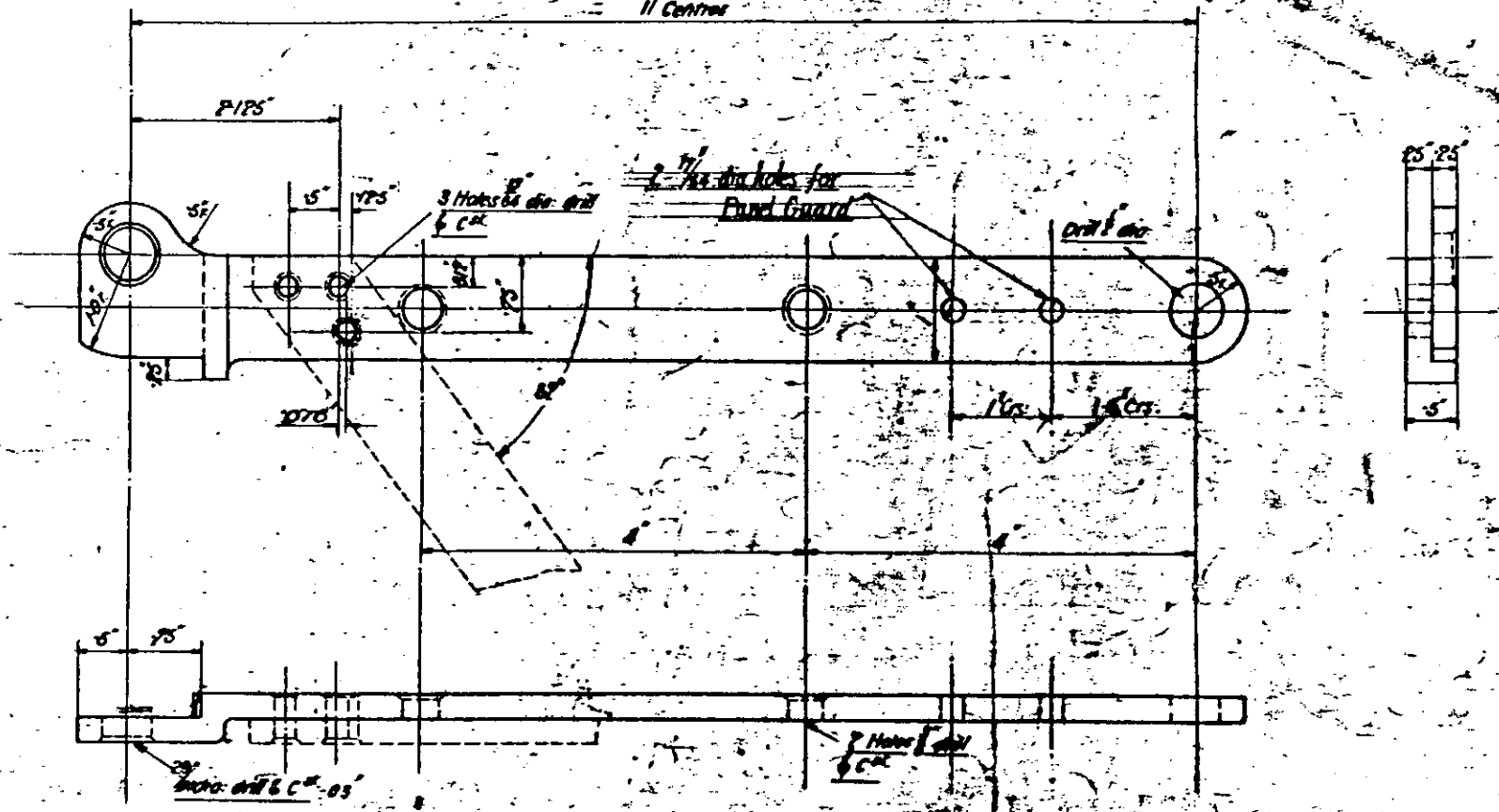

266

DRAWING No. 266—4	LUGGAGE CARRIER FRONT HALF LT. HD.	DRAWN BY
MATERIAL. M.S. F&RC.		TRACED BY
HEAT TREATMENT.		CHECKED BY
		PASSED BY
		DATE 20-6-19

H4S

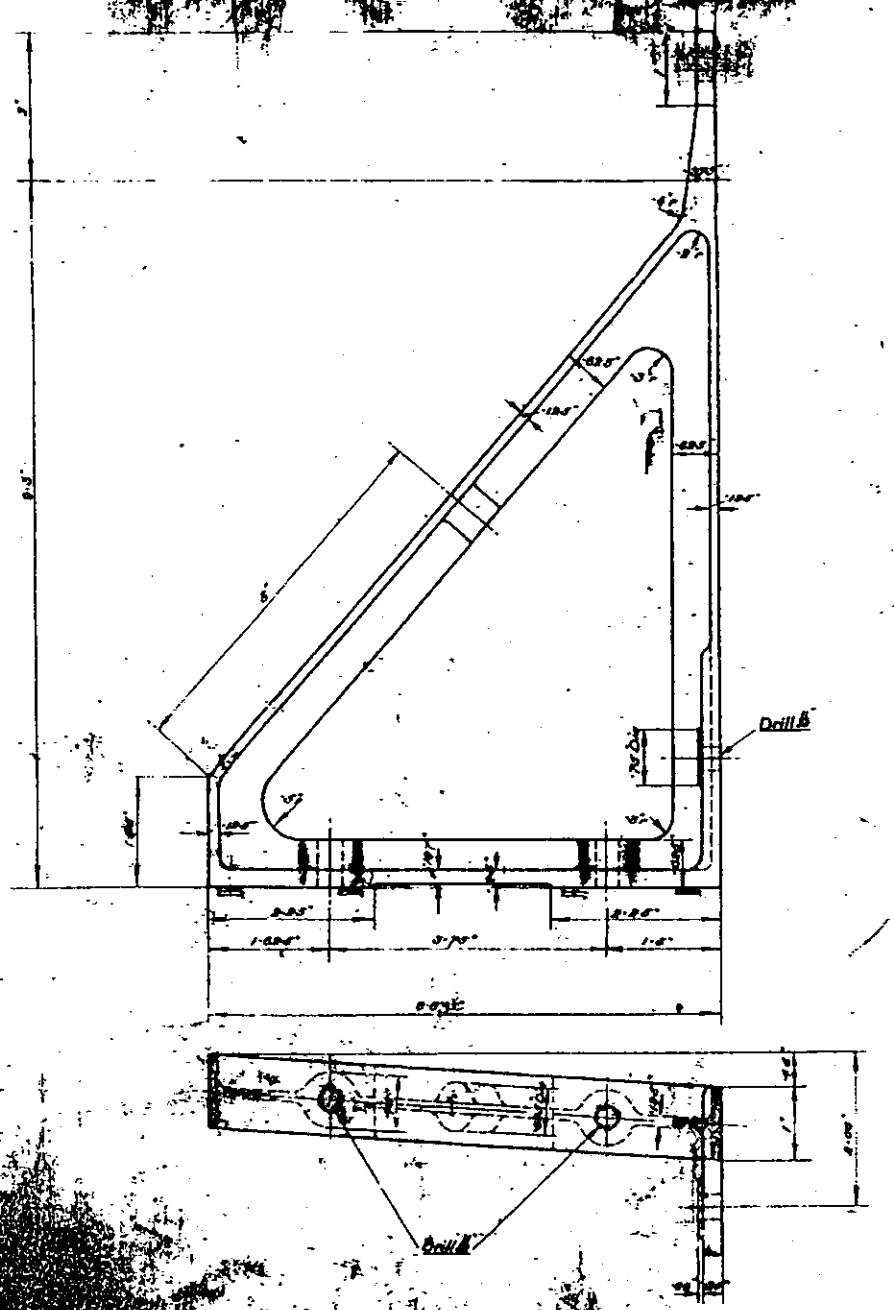

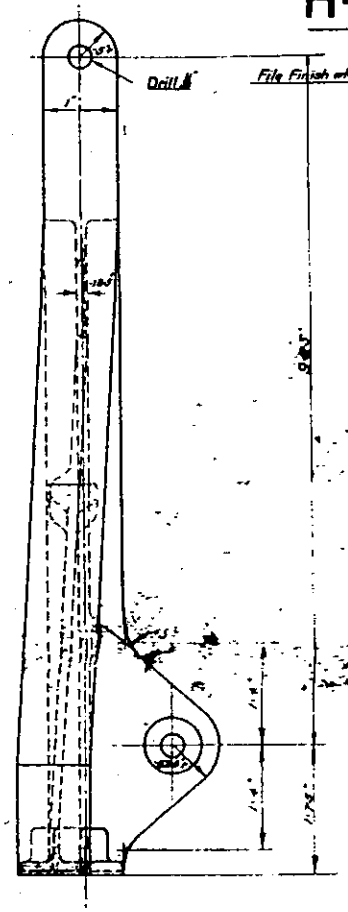

DASHBOARD SUPPORT LT. HD.

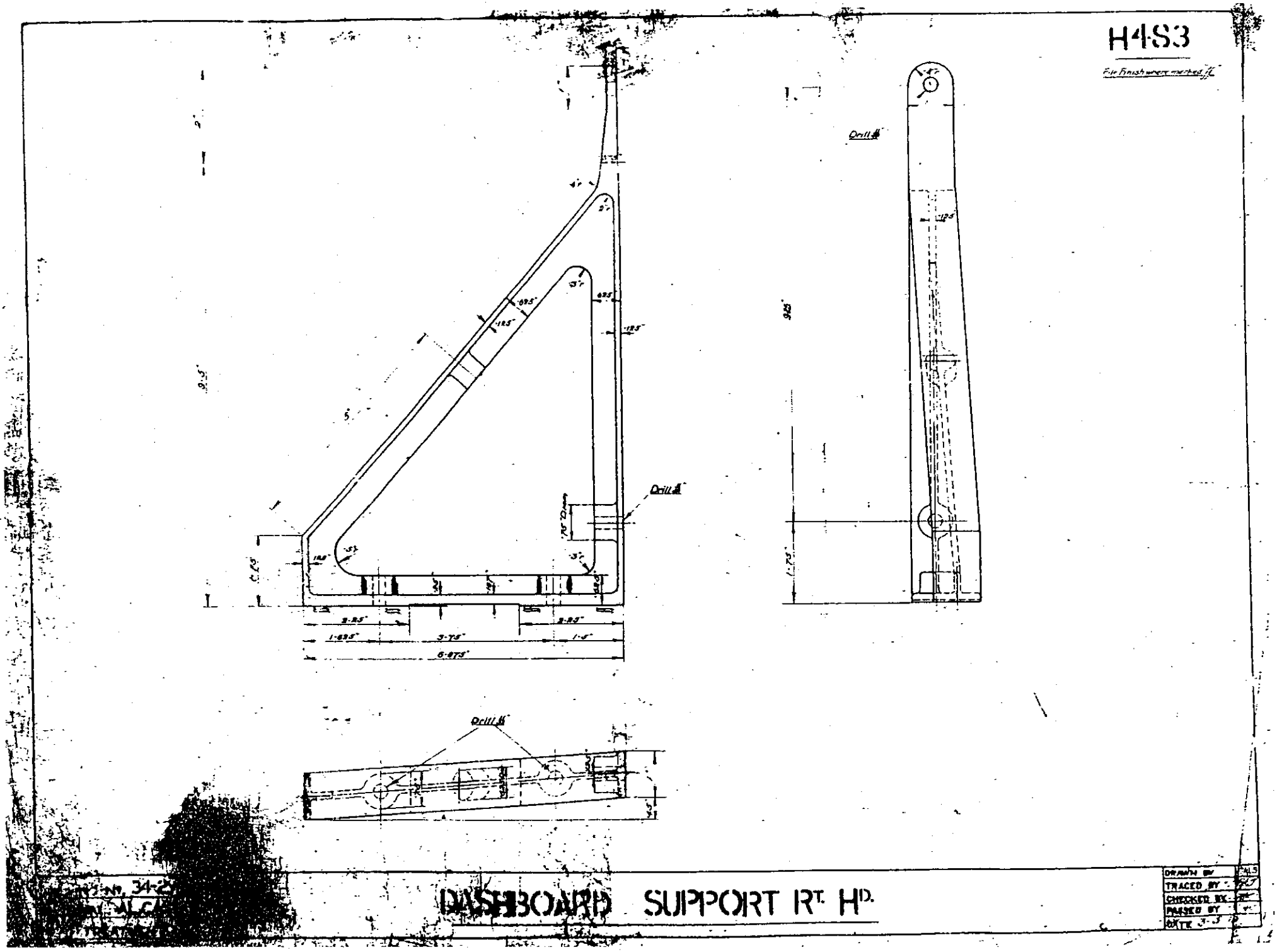
H4S3
File Finish where marked
Drill
Drill
Drill
DASHBOARD SUPPORT RT. HD.
DRAWN BY
TRACED BY
CHECKED BY
PASSED BY
DATE

H4·S7

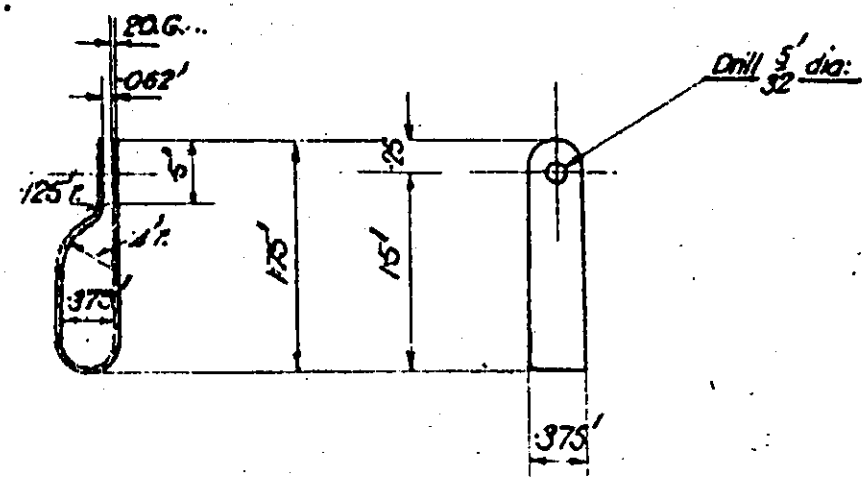

Length before bending = 3·7."

DRAWING No. 452 – 8.	CABLE CLIP	DRAWN BY
MATERIAL. Y.B. STRIP.		TRACED BY
HEAT TREATMENT.		CHECKED BY
		PASSED BY
		DATE 7-5-19.

H 41-SS

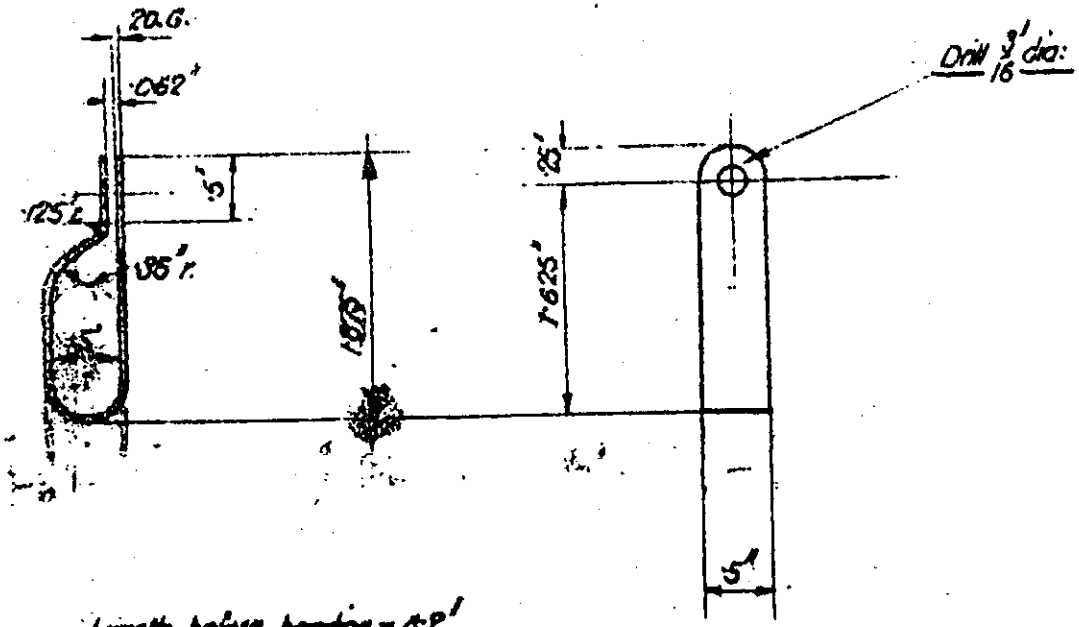

Length before bending = 4·2"

DRAWN BY	
TRACED BY	
CHECKED BY	
PASSED BY	
DATE	

H516

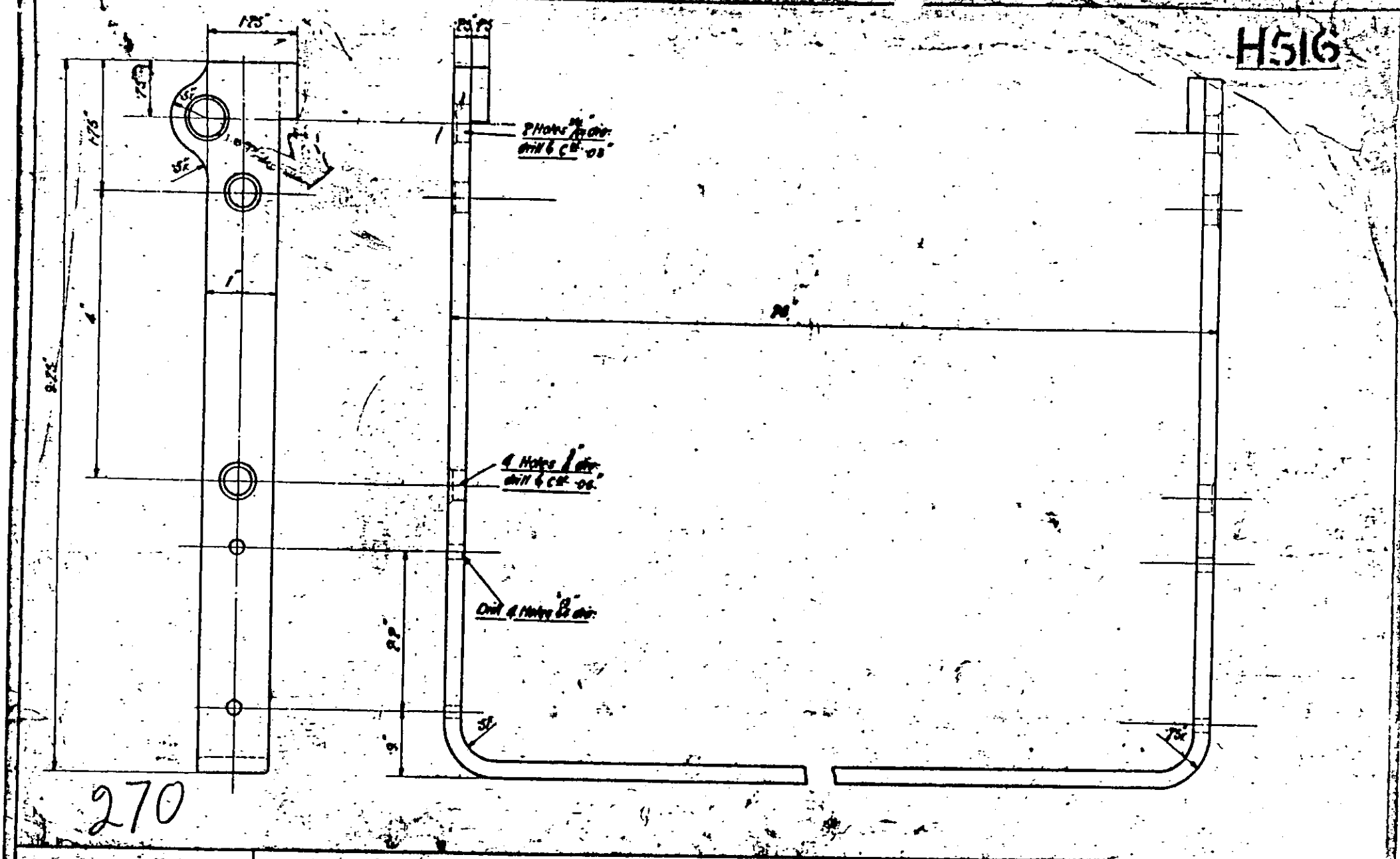

270

DRAWING No. 270—4
MATERIAL M.S. FORG.
HEAT TREATMENT

LUGGAGE CARRIER REAR HALF

DRAWN BY	HPH
TRACED BY	S.M.
CHECKED BY	
PASSED BY	
DATE 30 - 8 - 19	

U536

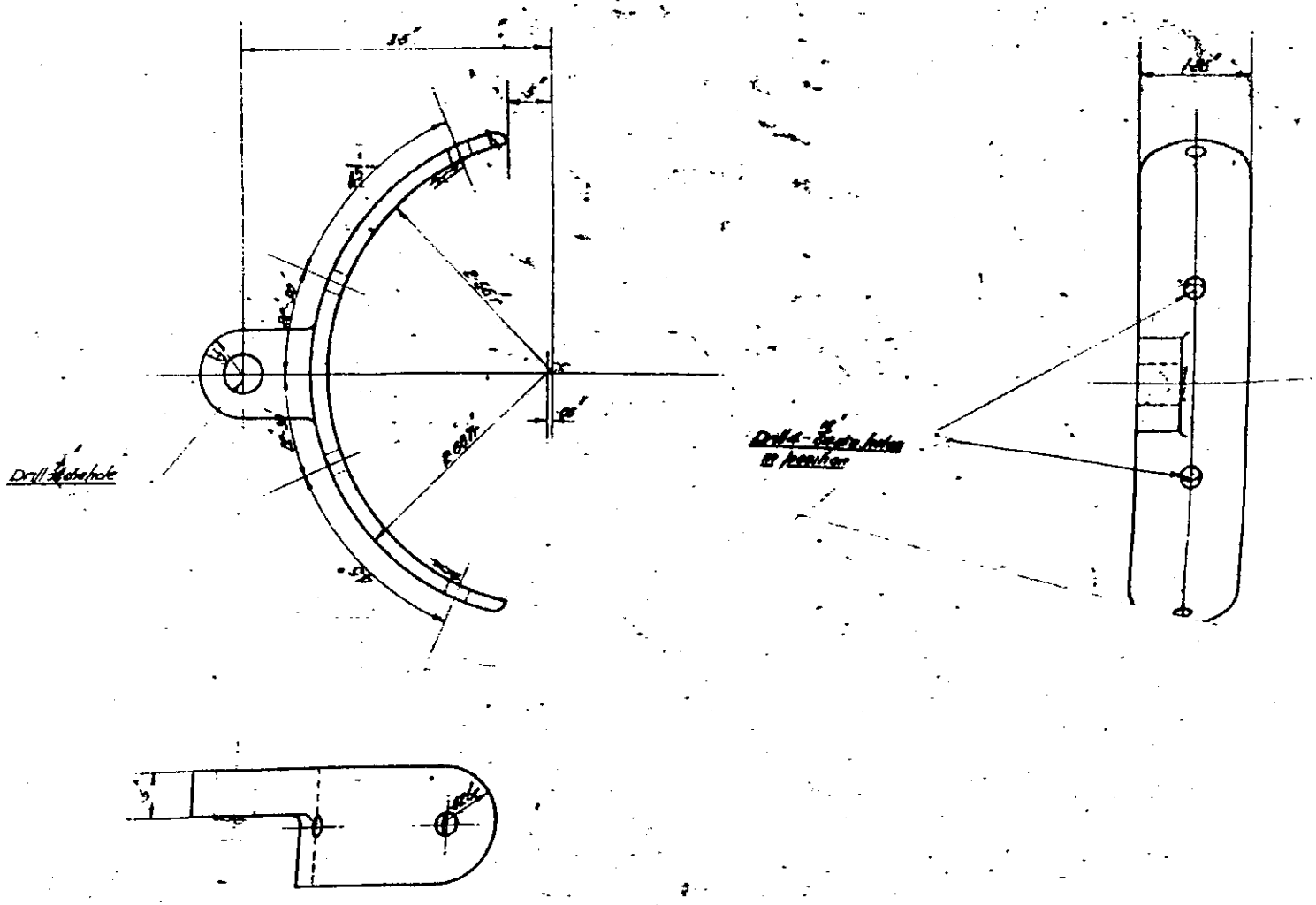

458

DRAWING No.	45S-4
MATERIAL:	M.I.
HEAT TREATMENT.	

SILENCER SUPPORTING SADDLE

Date Retraced 31-5-20

DRAWN BY	PJT
TRACED BY	[illegible]
CHECKED BY	[illegible]
PASSED BY	[illegible]
DATE	26-7-[illegible]

H554

V 5502

AL FORG. Y ALLOY

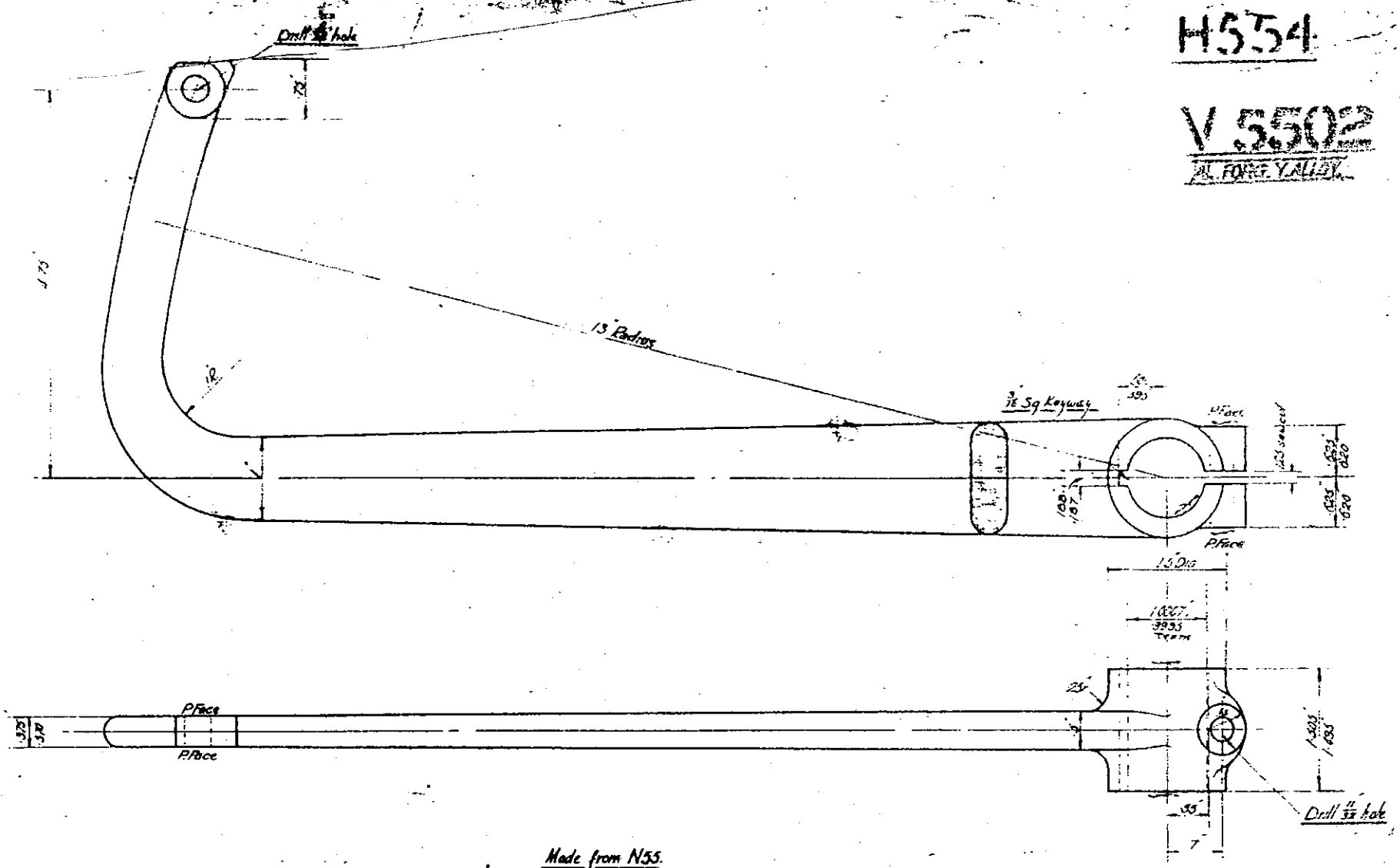

Made from N55.

DRAWING No. 70 - 4	COUTCH PEDAL LEVER	DRAWN BY
MATERIAL, M.S.STPG.		TRACED BY
HEAT TREATMENT		CHECKED BY
		PASSED BY
		DATE

H 556

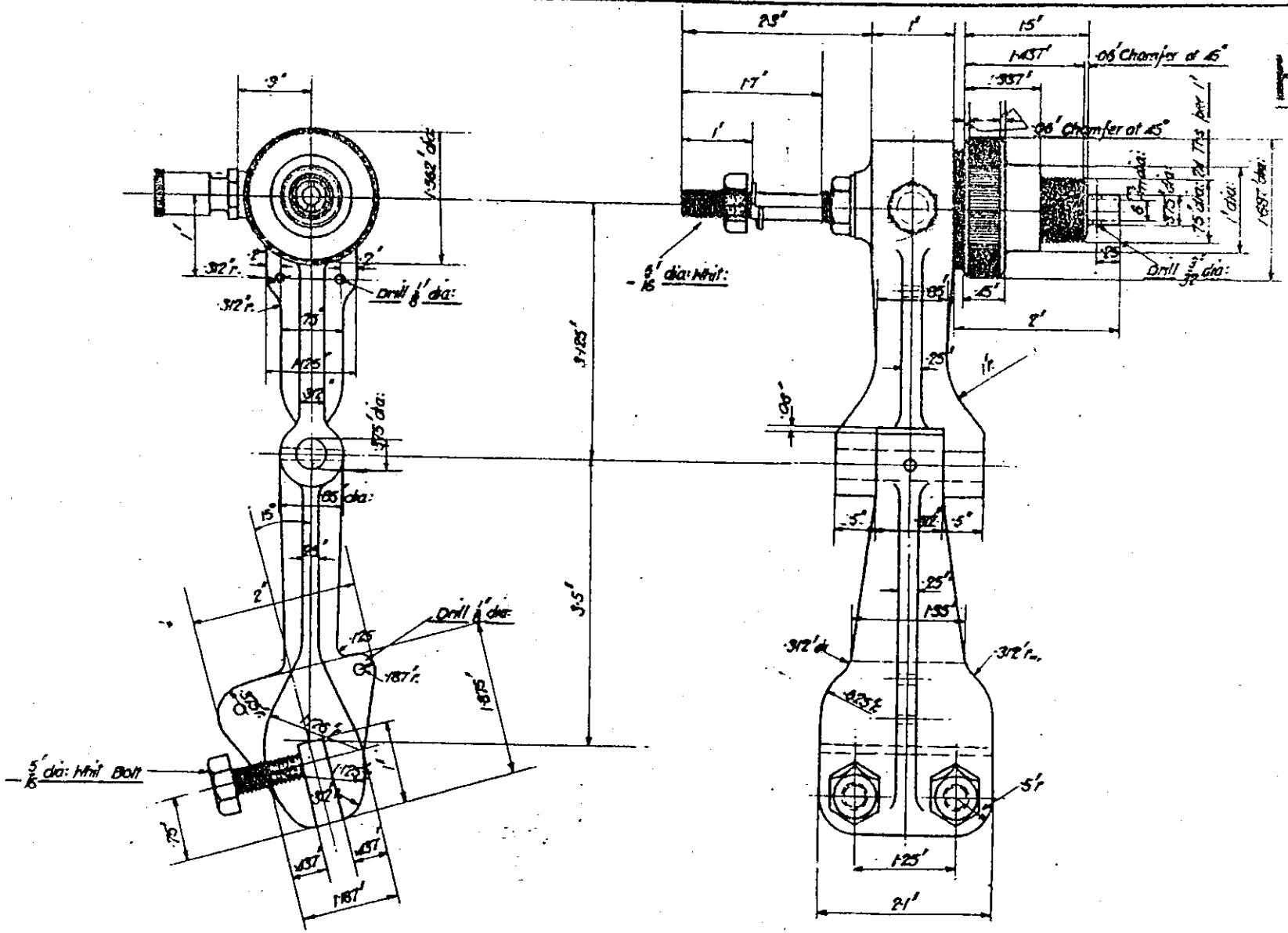

DRAWING Nº. 170—4.
MATERIAL. VARIOUS.
HEAT TREATMENT.

SPEEDOMETER BRACKET (FRAME)

DRAWN BY	
TRACED BY	
CHECKED BY	
PASSED BY	
DATE 27/5/19.	

H577

M/c where marked f.

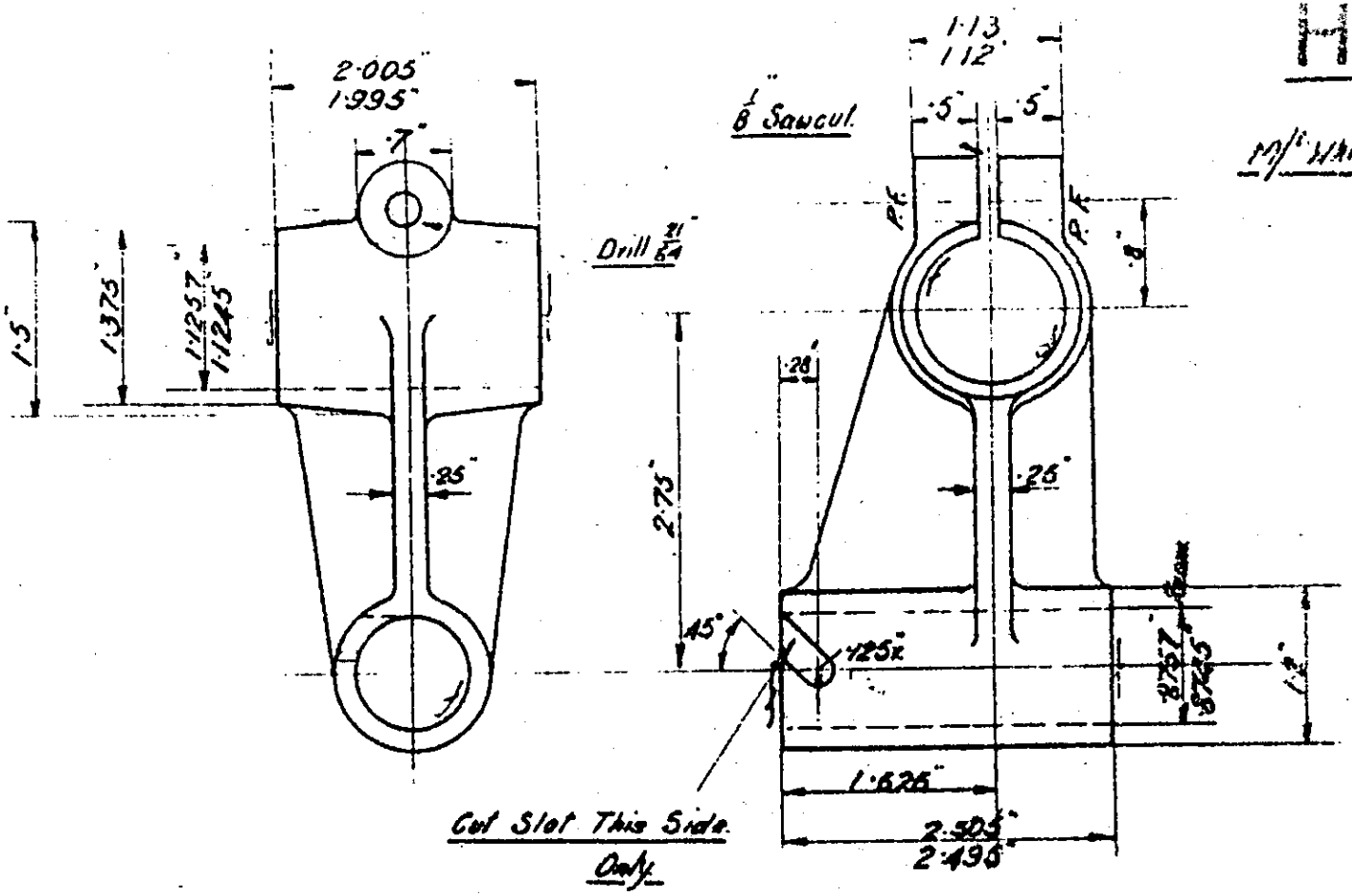

DRAWING No. 4S5-S	STARTING HANDLE BRACKET	DRAWN BY
MATERIAL, C. M. CASTG.		TRACED BY
HEAT TREATMENT.		CHECKED BY
		PASSED BY
		DATE

H5SI

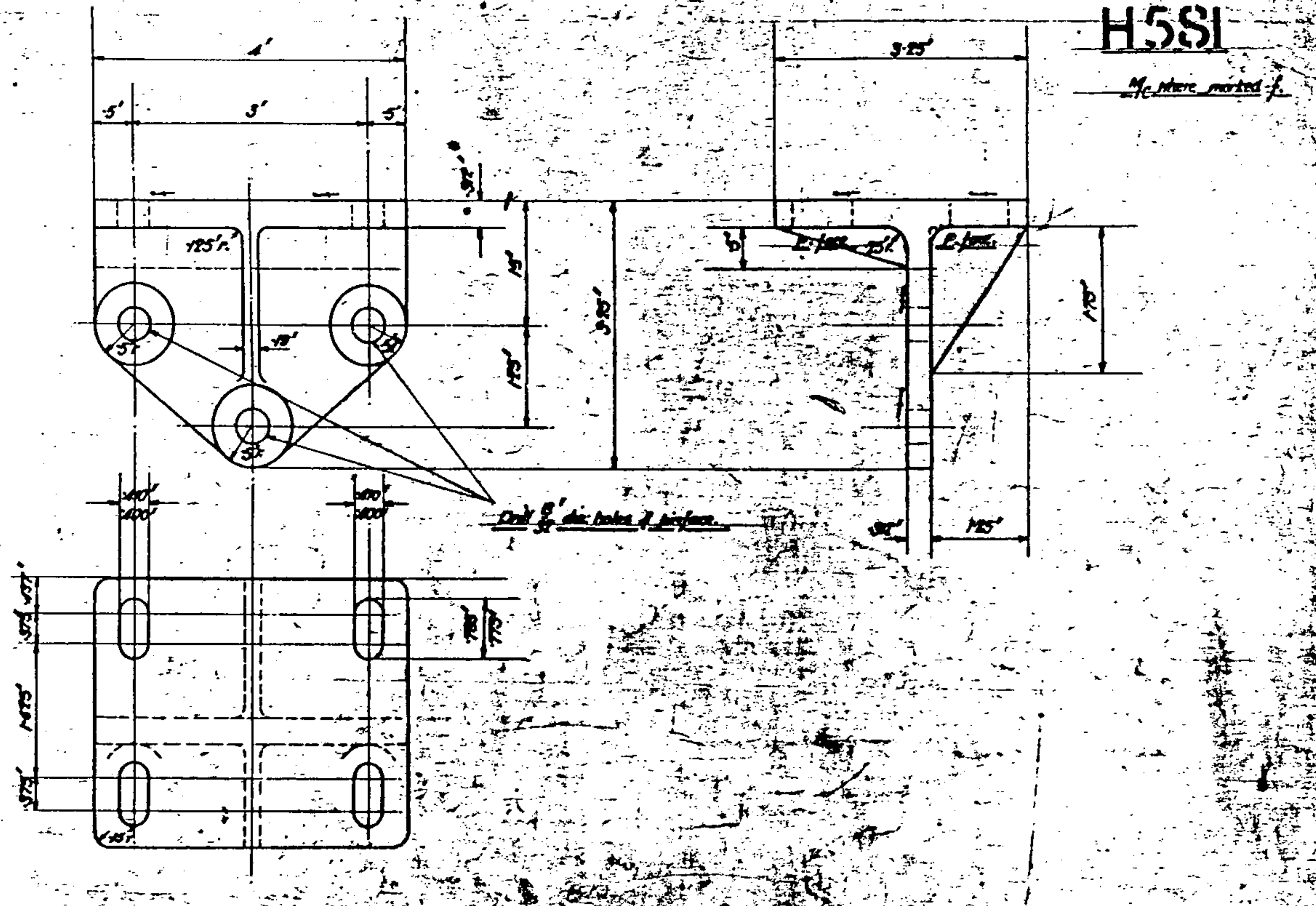

268

DRAWING Nº. 2GS —4	DYNAMO TABLE 1	DRAWN BY
MATERIAL. A.L.		TRACED BY
HEAT TREATMENT.		CHECKED BY
		PASSED BY
		DATE

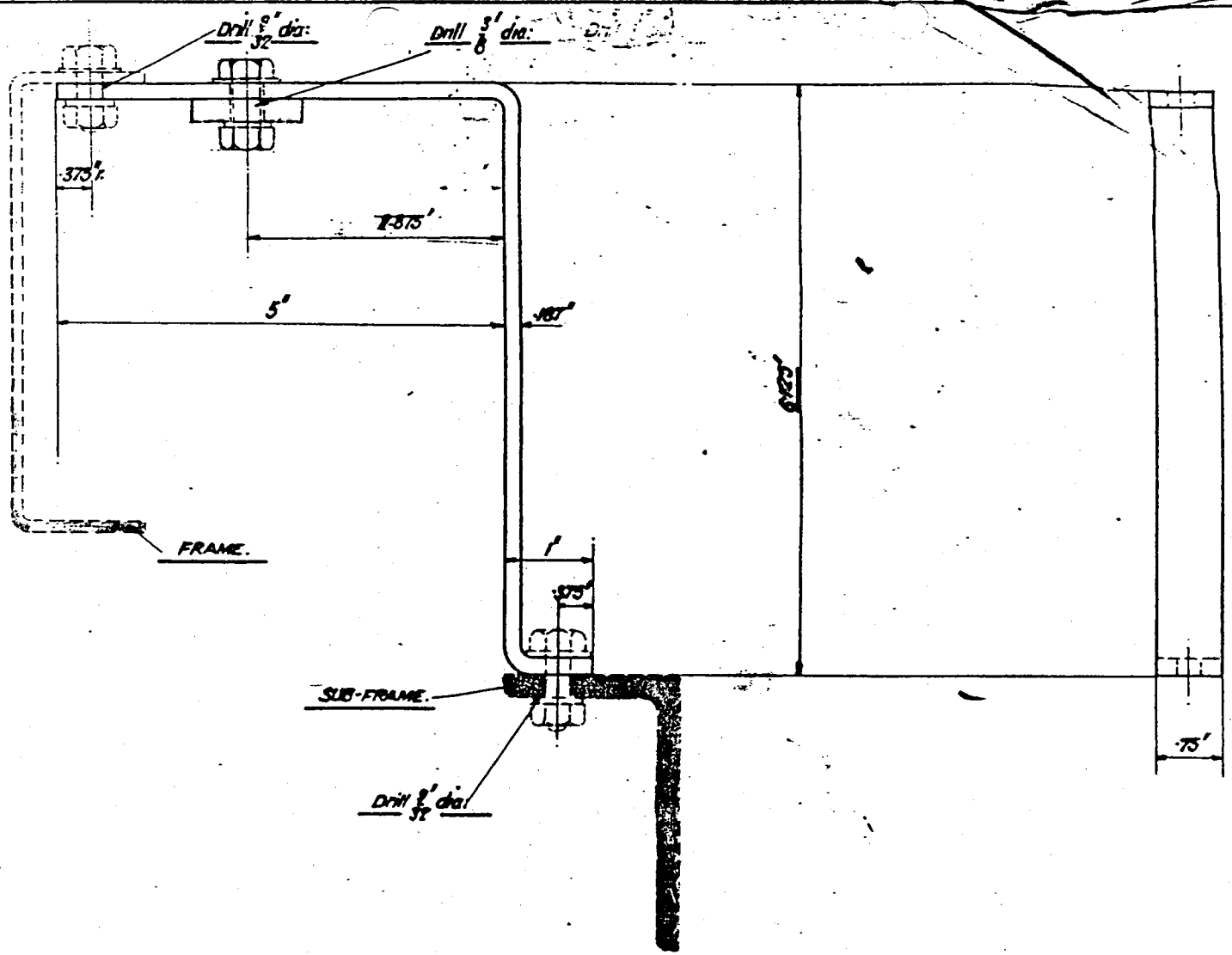

H583

DRAWING No. 269-4.	BRACKET FOR FOOT SWITCH.	DRAWN BY
MATERIAL. M. S.		TRACED BY
HEAT TREATMENT.		CHECKED BY
		PASSED BY
		DATE

H5S6.H5S7

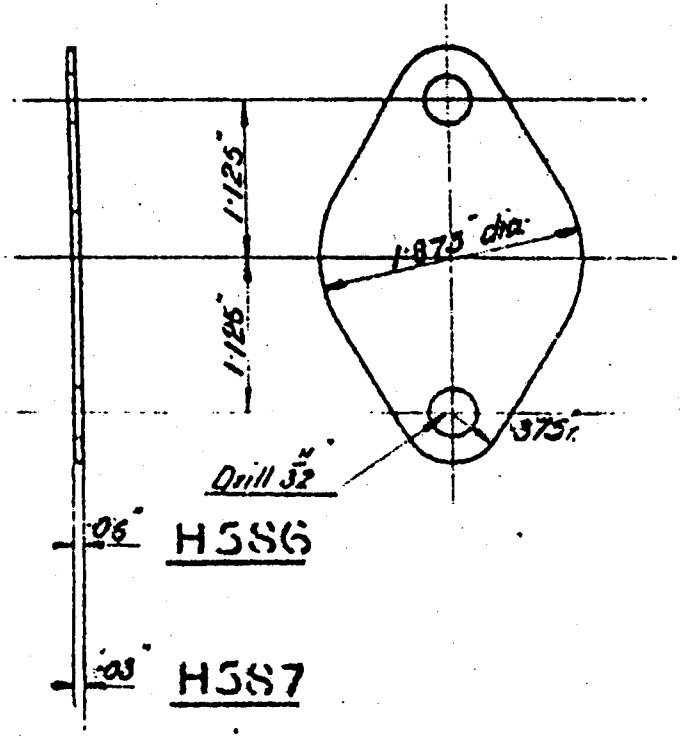

DRAWING Nº. 485-S MATERIAL Sheet Steel. HEAT TREATMENT	PACKING PIECE FOR CROSS TUBE.	DRAWN BY TRACED BY CHECKED BY PASSED BY DATE

LH. H592

RH. H593

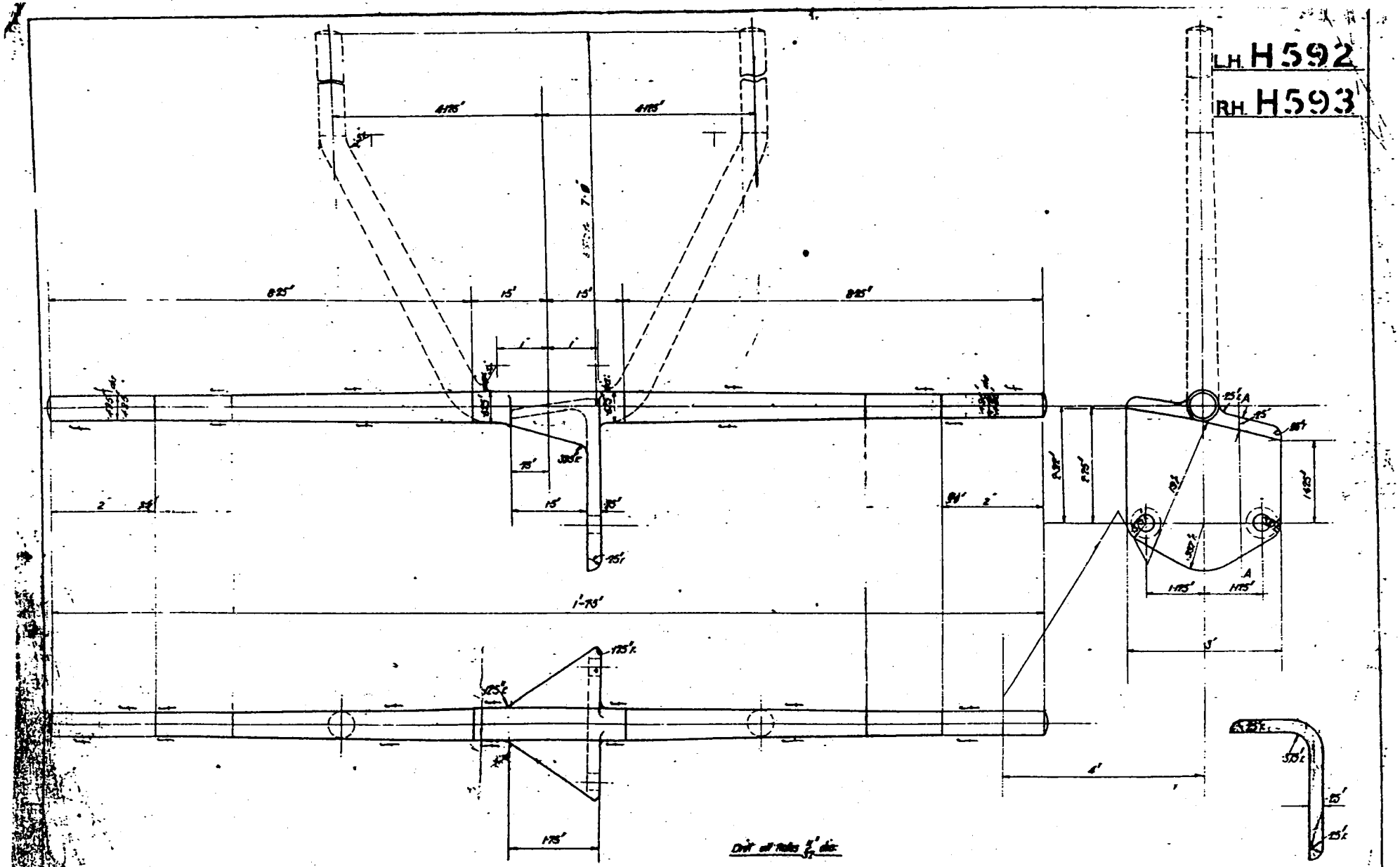

134

LAMP BRACKET

A596

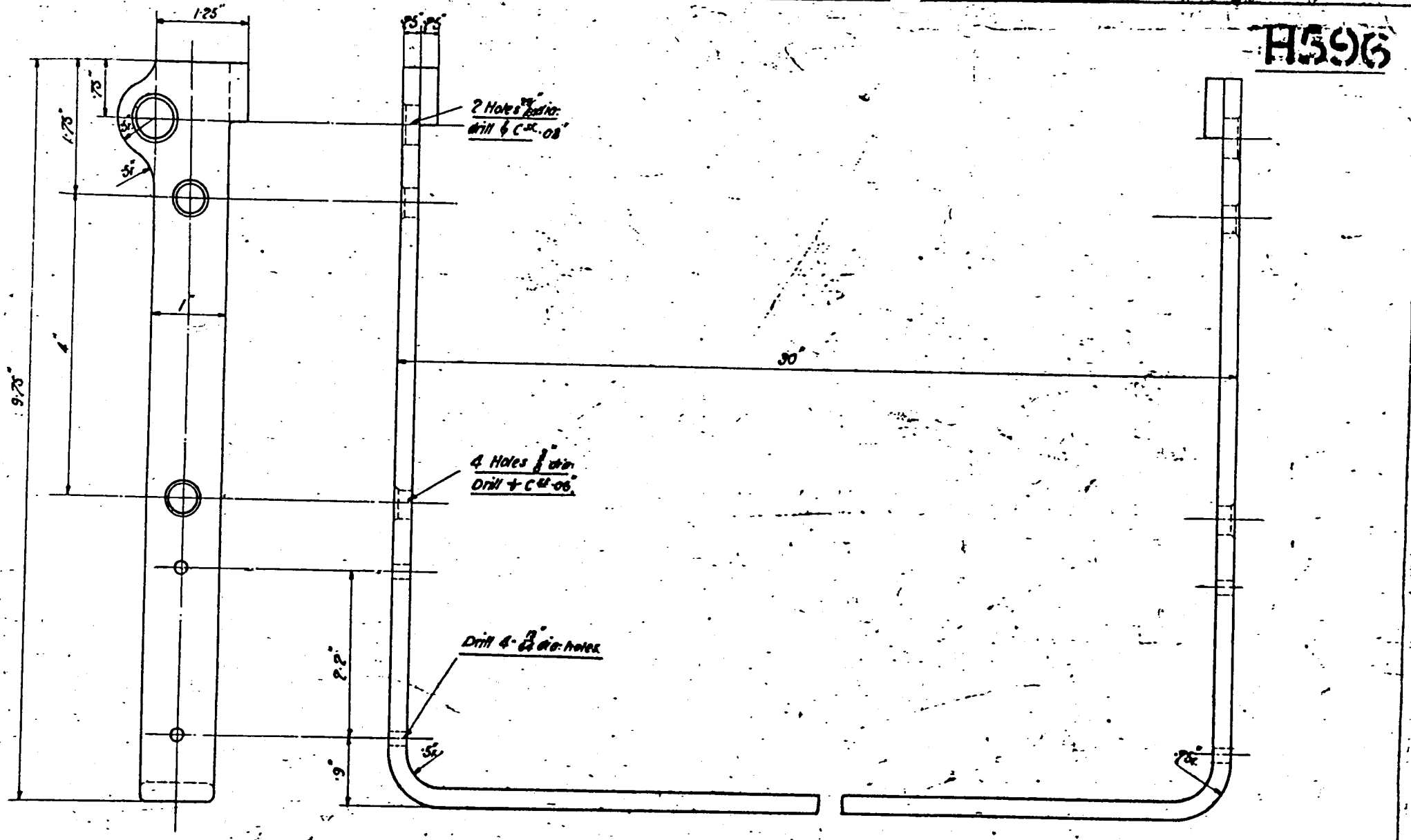

DRAWING No. 267-4

MATERIAL M.S FORC

HEAT TREATMENT

LUCCACE CARRIER REAR HALF

DRAWN BY	N.P.K.
TRACED BY	S.N.
CHECKED BY	
PASSED BY	
DATE 30-5-19	

H597

All file finish

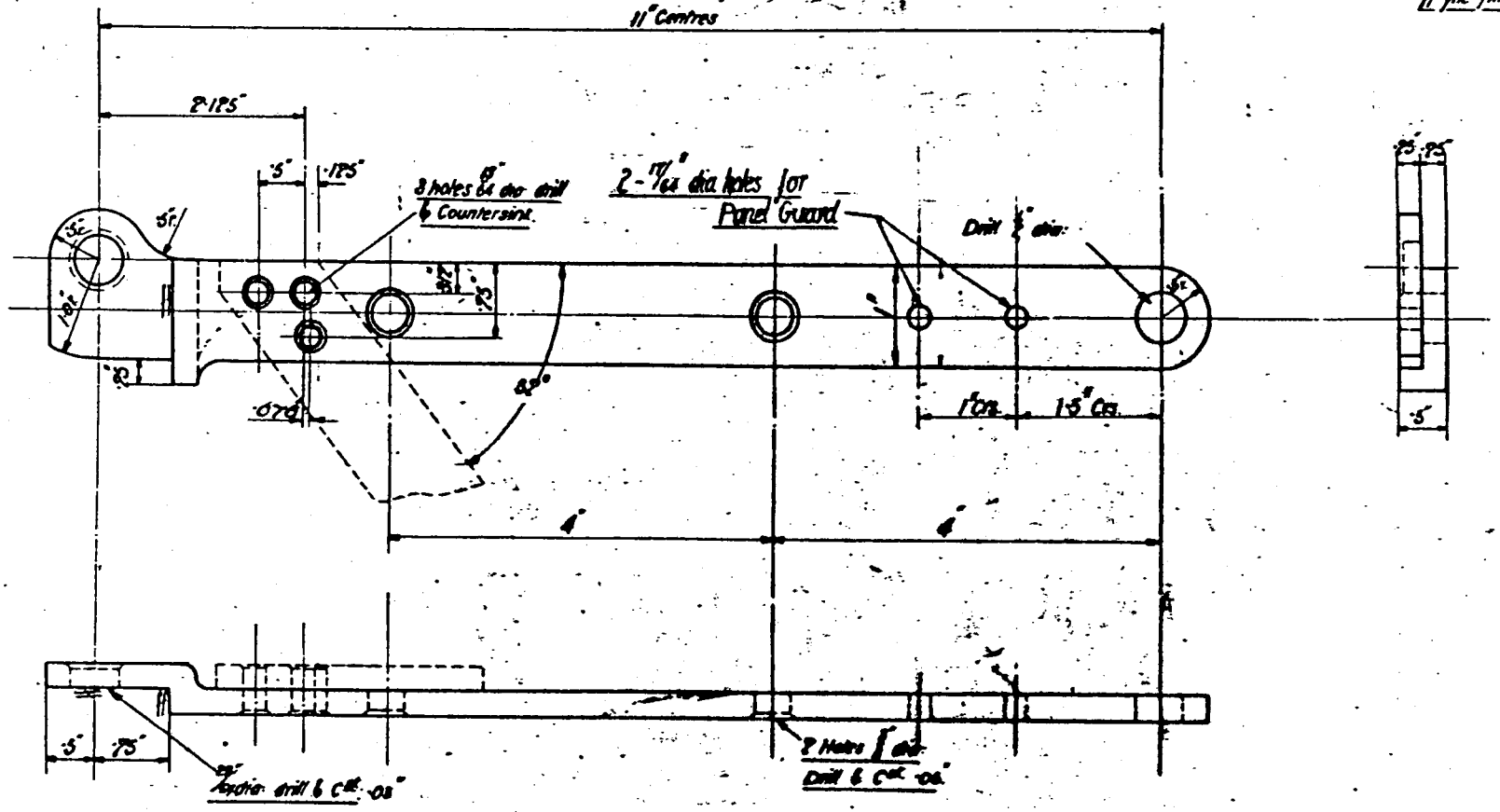

DRAWING No. 265—4	LUGGAGE CARRIER FRONT HALF RT. HD.
MATERIAL. MSFORG.	
HEAT TREATMENT.	

TYPE

DRAWN BY	H.P.W.
TRACED BY	S.H.
CHECKED BY	
PASSED BY	
DATE 30 - 5 - 17	

H 610

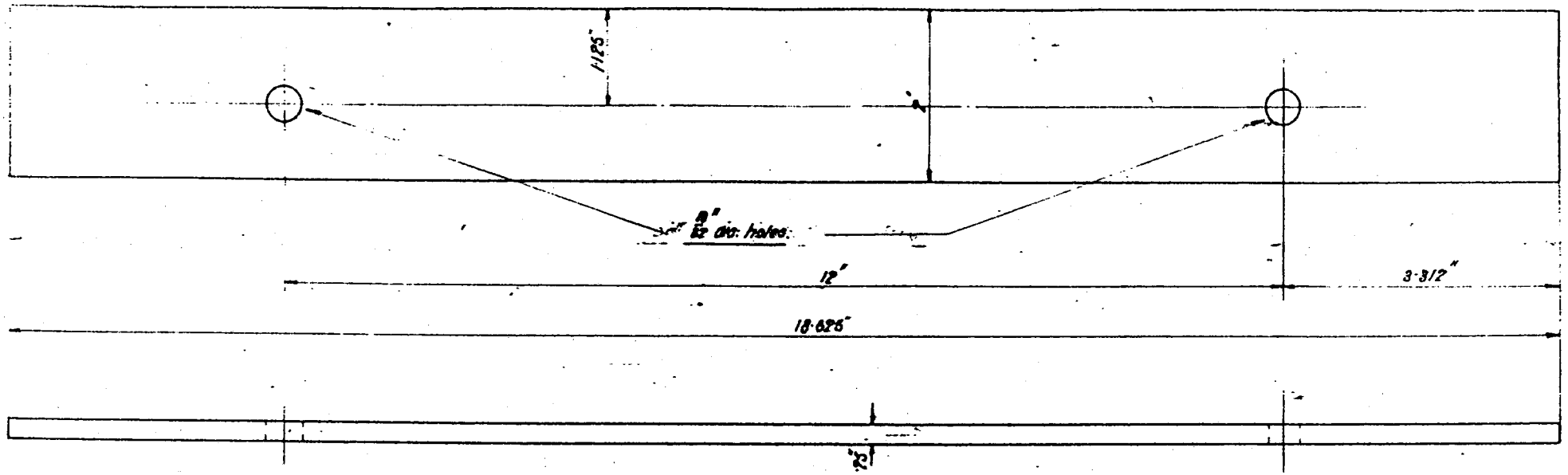

DRAWING No. 294-4
MATERIAL. FELT
HEAT TREATMENT.

FELT PACKING FOR RADIATOR

DRAWN BY	J.H.
TRACED BY	J.N
CHECKED BY	
PASSED BY	
DATE 30 - 10 - 15	

H 636

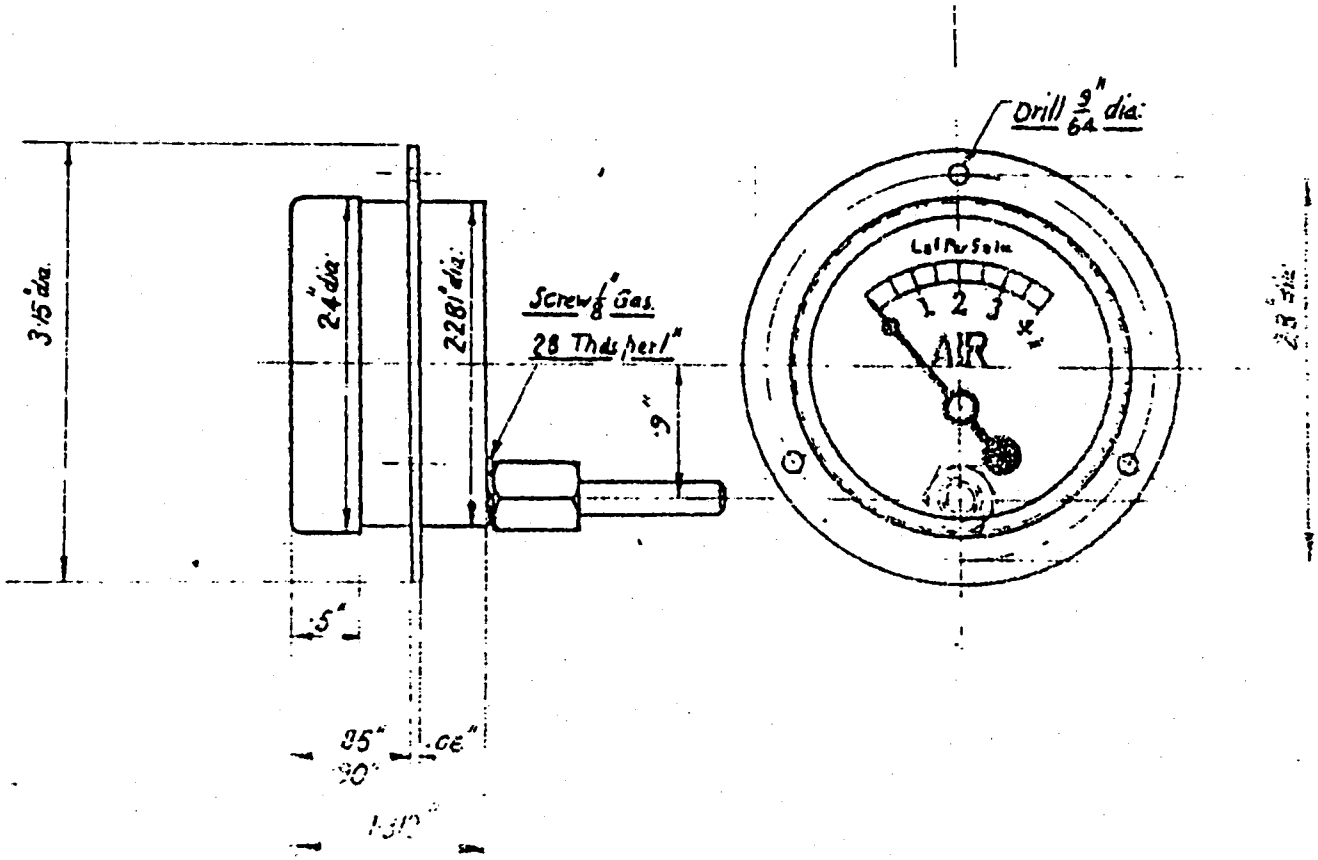

DRAWING No. 55 D—S

MATERIAL VARIOUS

HEAT TREATMENT

AIR PRESSURE GAUGE

H637

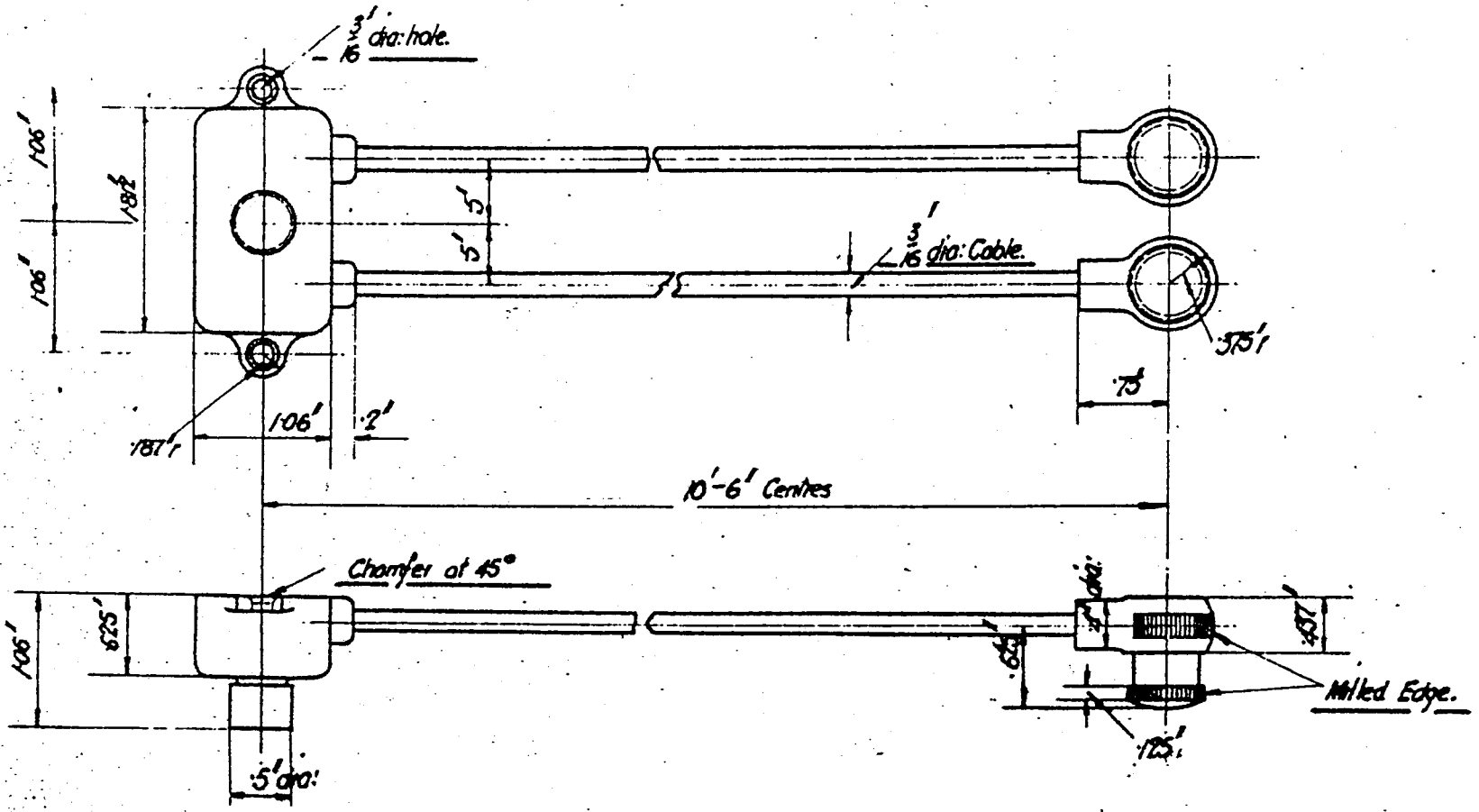

DRAWING Nº 669 – S	HORN SWITCH & CONNECTIONS	DRAWN BY
MATERIAL VARIOUS		TRACED BY
HEAT TREATMENT.		CHECKED BY
		PASSED BY
		DATE 4-3-15.

HG43

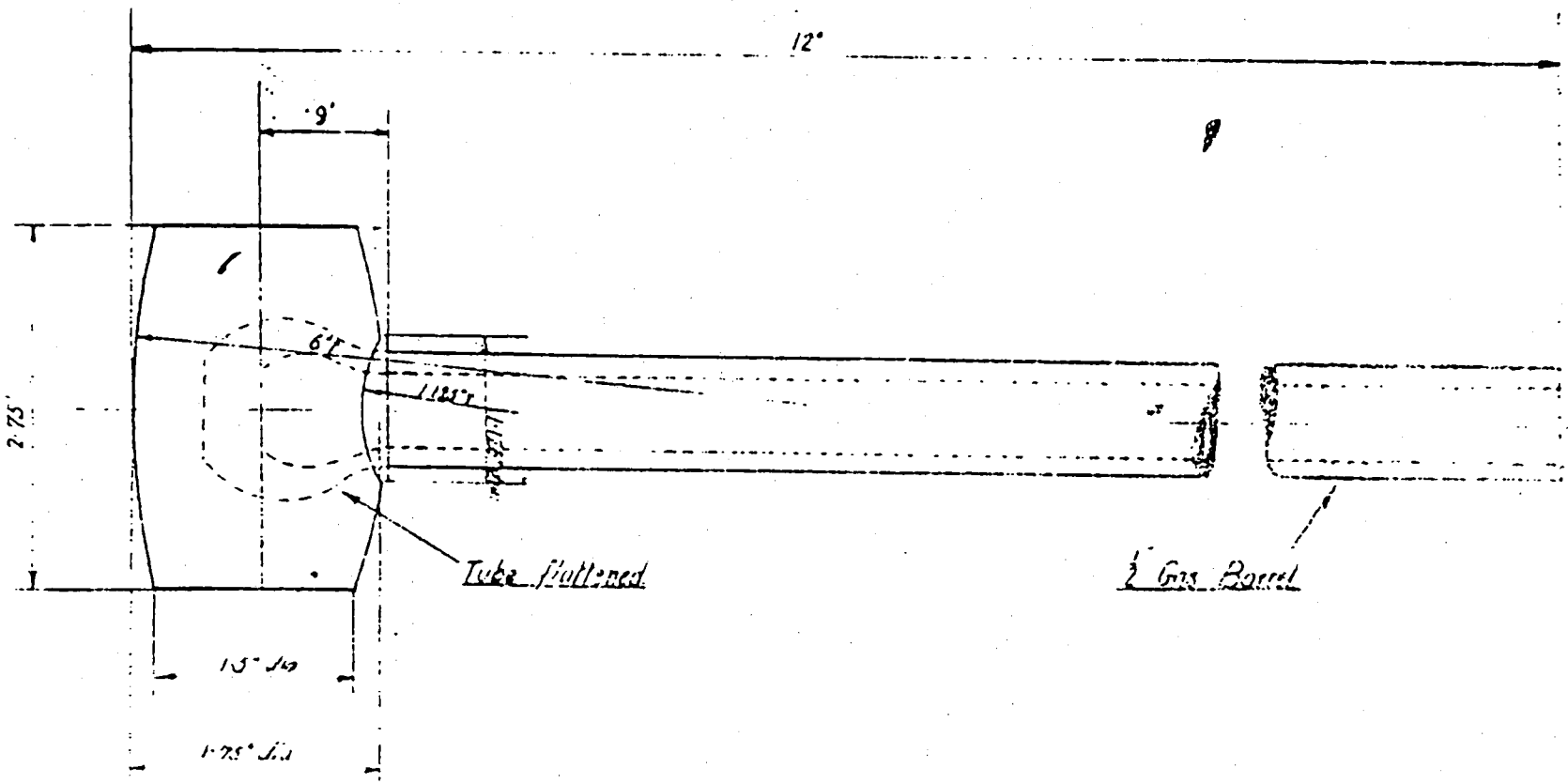

DRAWING No. 55[illegible]—[illegible]

MATERIAL [illegible] STEEL

[illegible] DEPARTMENT

LEAD HAMMER

H652

M/c where marked ∫

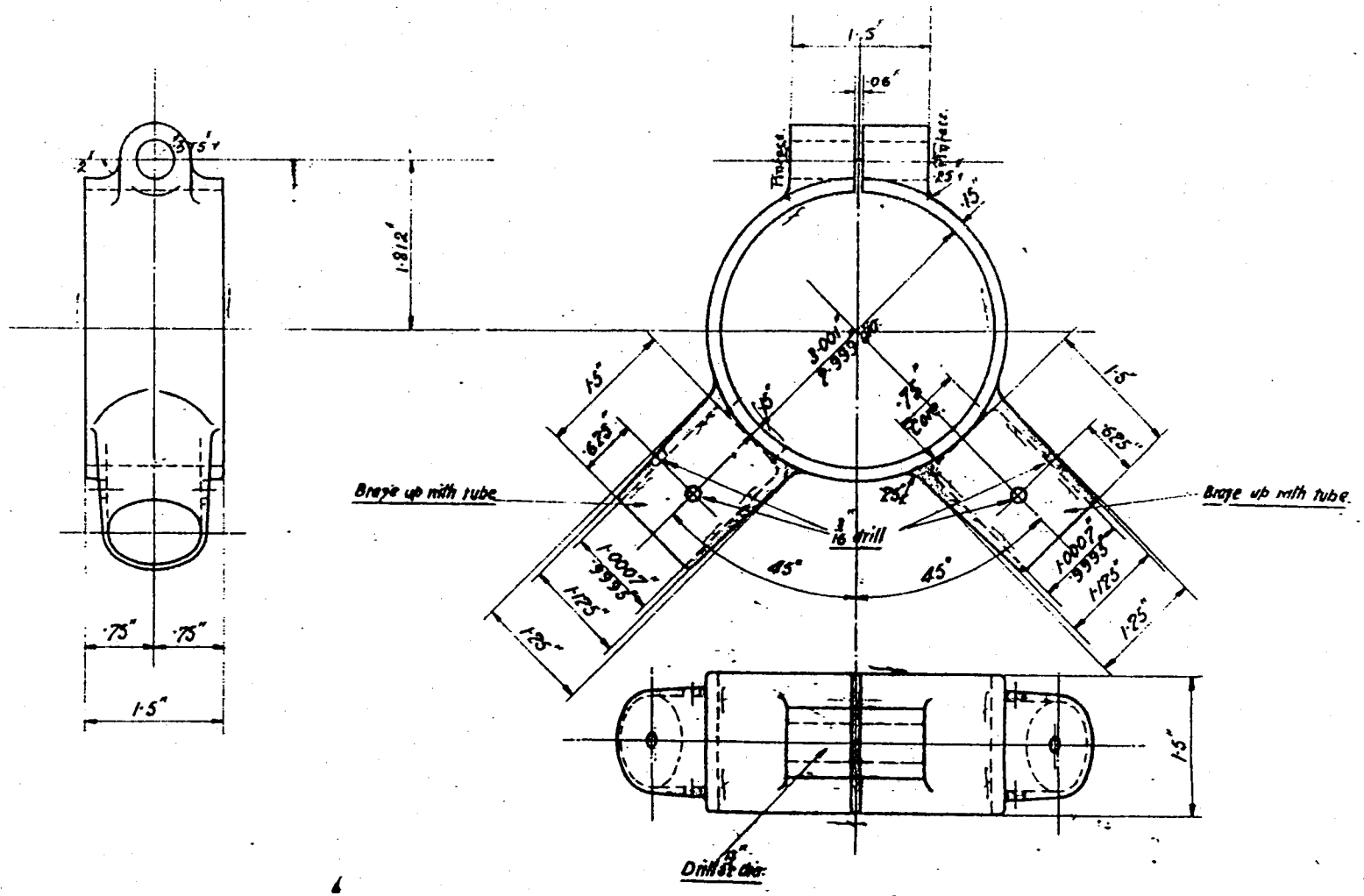

181

DRAWING No. 181 —4	TOP BRACKET FOR WHEEL CARRIER SUPPORT	DRAWN BY EWH
MATERIAL. M. I.		TRACED BY K.H.
HEAT TREATMENT.		CHECKED BY
		PASSED BY
		DATE 1-7-19

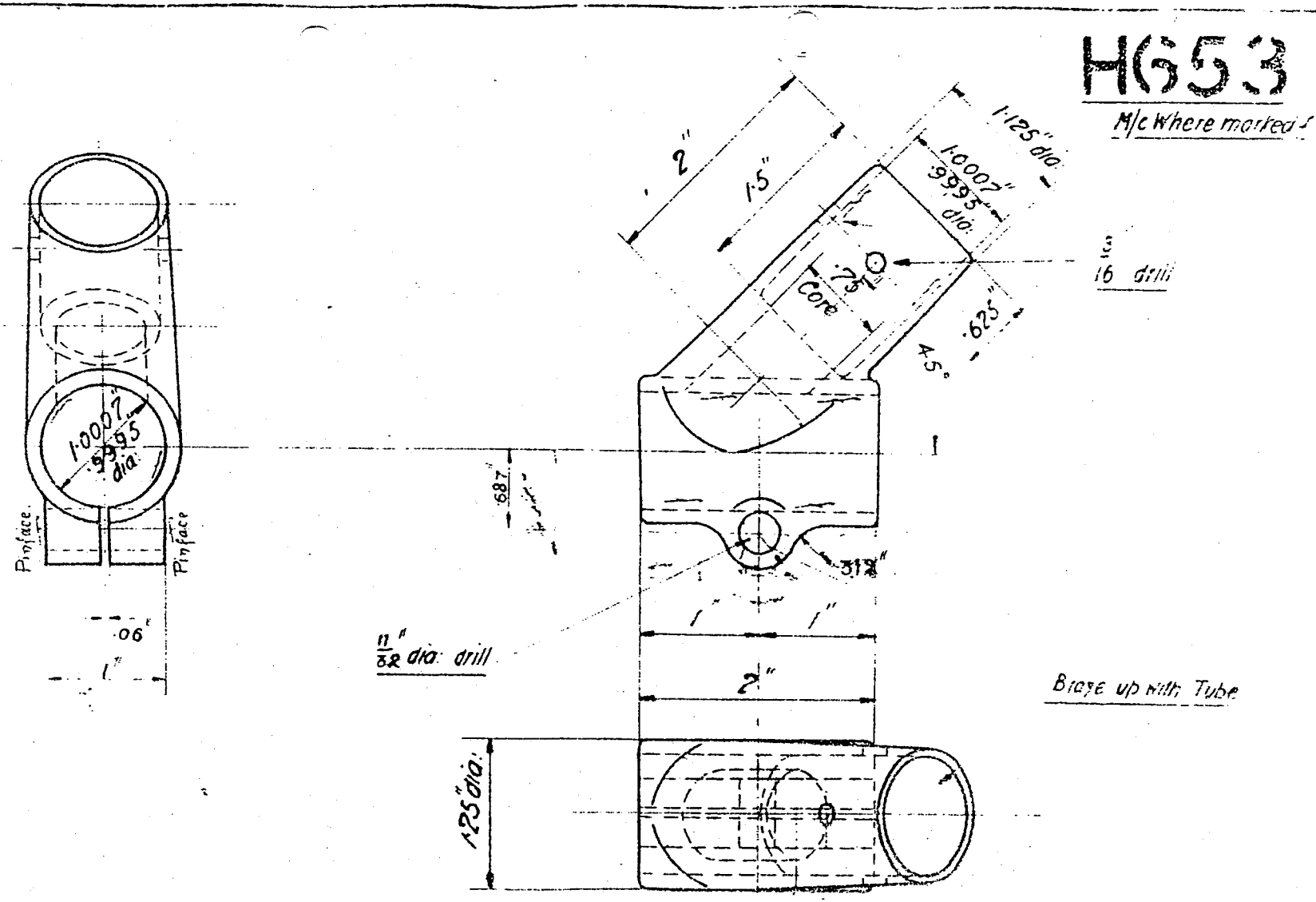

DRAWING NO. 560-8	BOTTOM BRACKET	DRAWN BY	E.W.H.
MATERIAL. M. I.	FOR WHEEL CARRIER SUPPORT	TRACED BY	S.H.
HEAT TREATMENT.		CHECKED BY	[illegible]
		PASSED BY	[illegible]
		DATE 2-7-19	

HG54

M/c where marked [illegible]

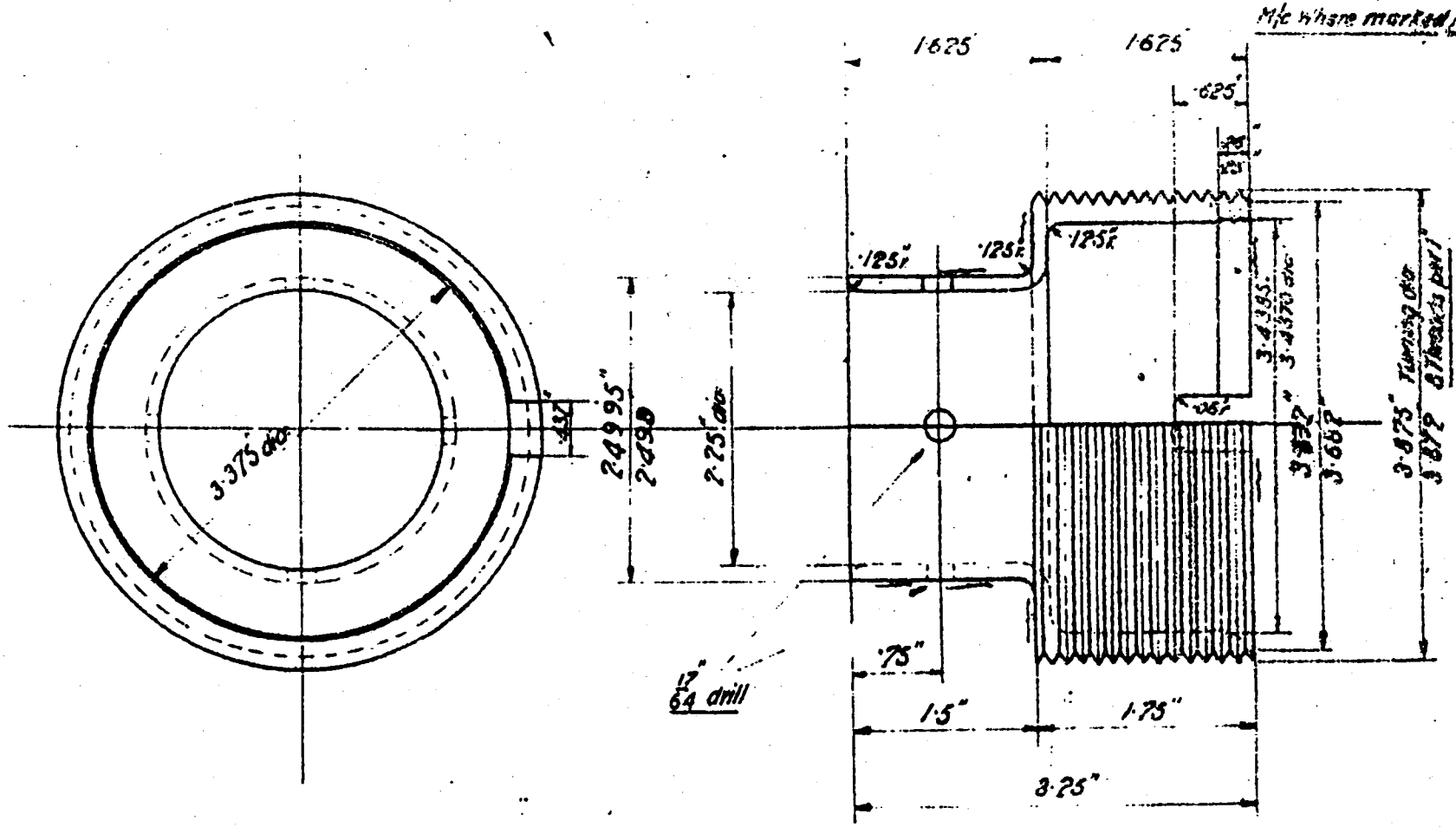

DRAWING No. 561 – S

MATERIAL, M. I.

HEAT TREATMENT.

SCREWED END FOR WHEEL CARRIER TUBE

DRAWN BY	[illegible]
TRACED BY	S.H.
CHECKED BY	[illegible]
PASSED BY	[illegible]
DATE 5 – [illegible]	19[illegible]

H 6SS

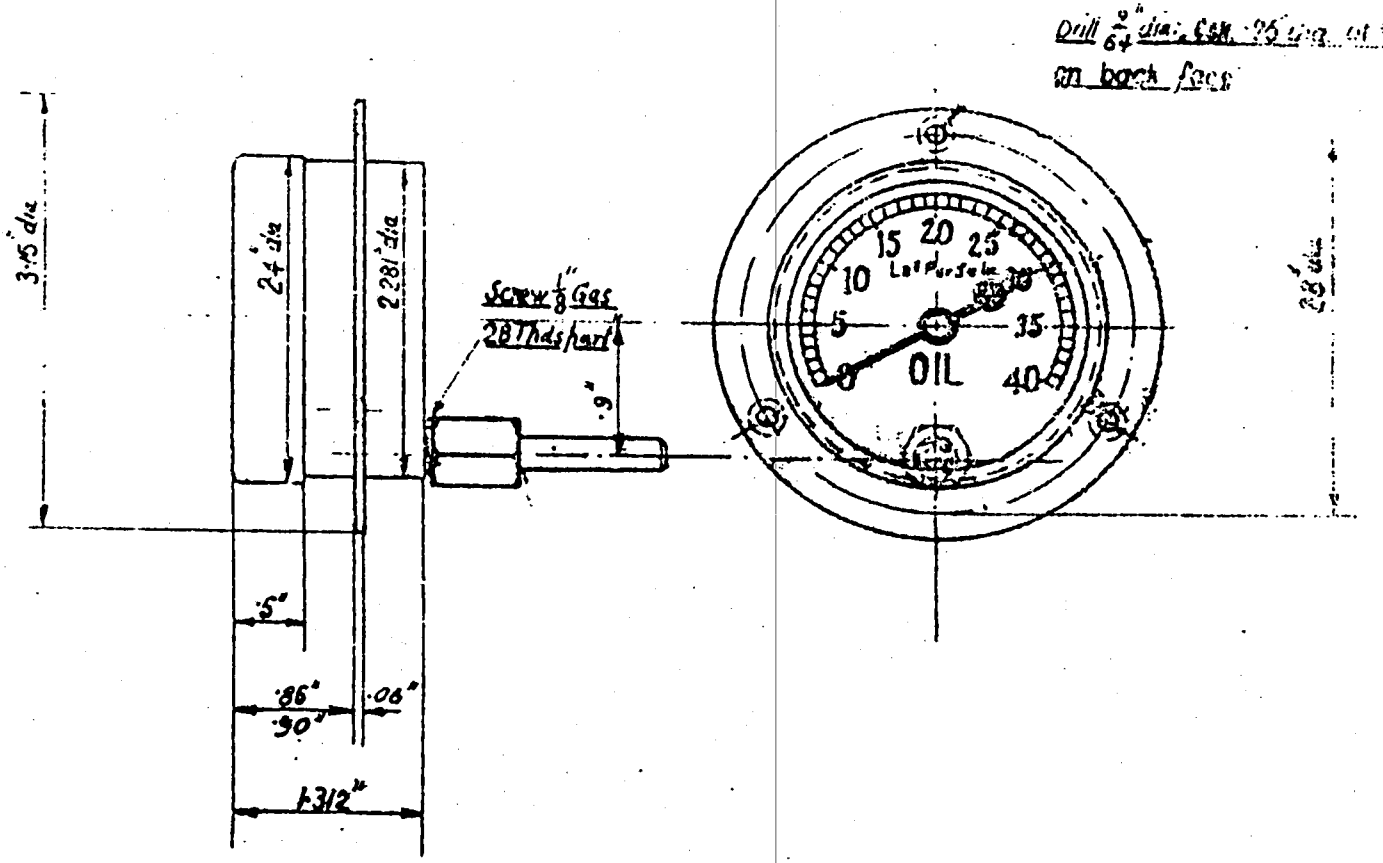

Redrawn 23-6-26

DRAWING No. 553-6	PRESSURE GAUGE	DRAWN BY
MATERIAL MARINOLX		TRACED BY
HEAT TREATMENT		CHECKED BY
		PASSED BY
		DATE

2929

H659

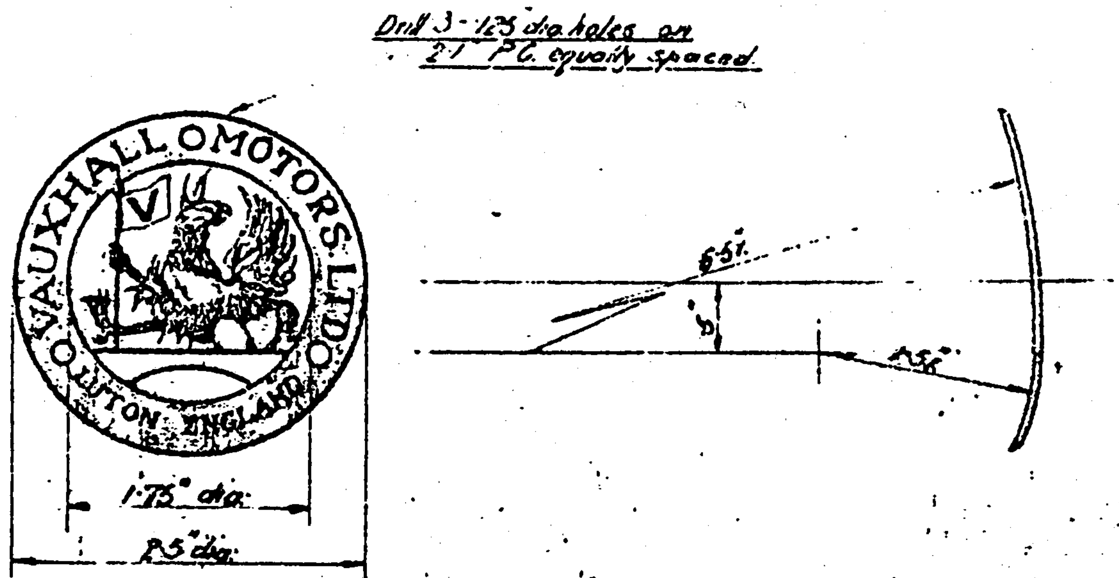

566

RADIATOR BADGE

HG61

M/c Where marked ∫

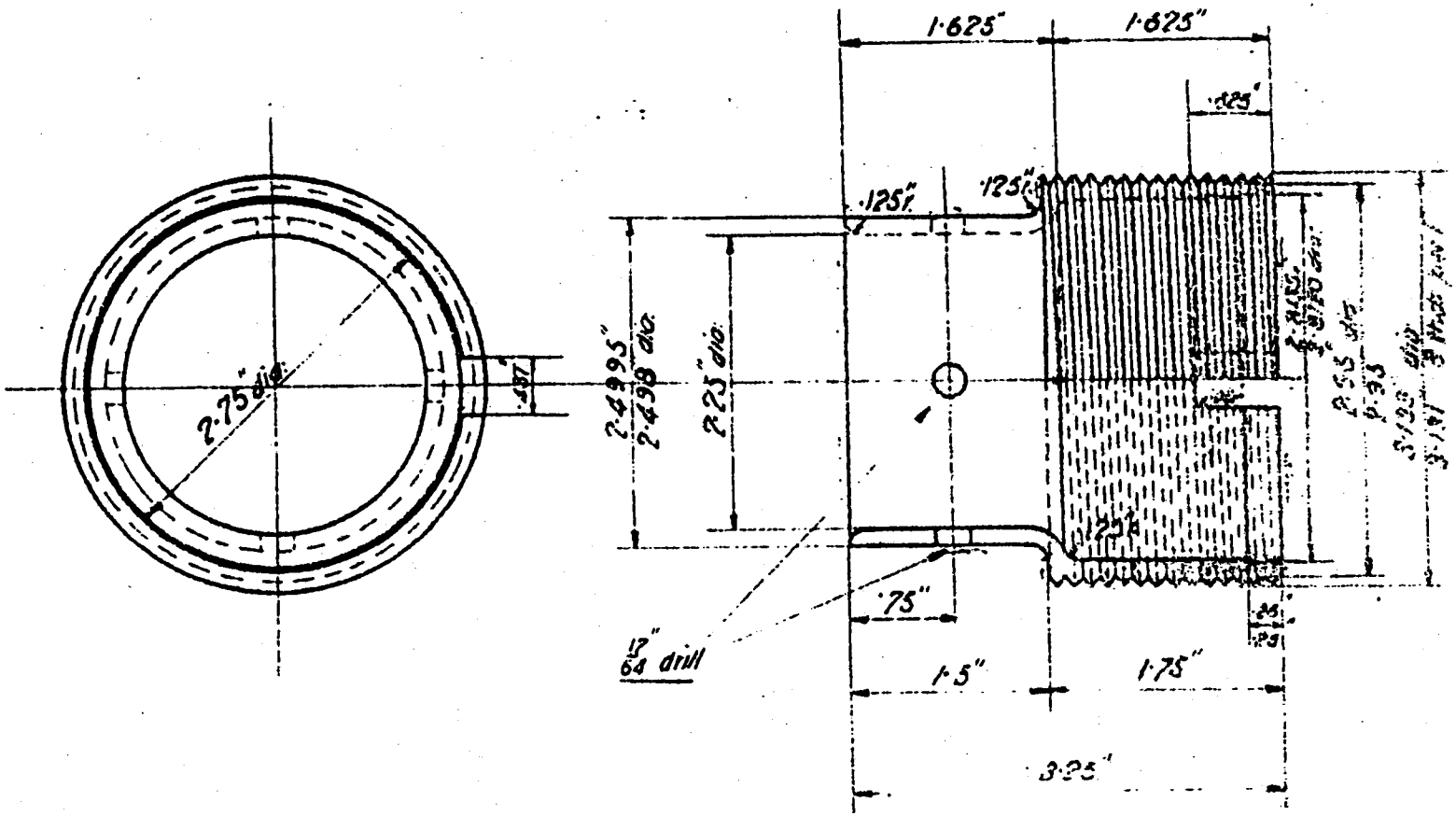

DRAWING No. 5661 – S

MATERIAL M. I.

HEAT TREATMENT

SCREWED END FOR WHEELCARRIER TUBE

DRAWN BY	
TRACED BY	
CHECKED BY	
PASSED BY	
DATE	

HGG4

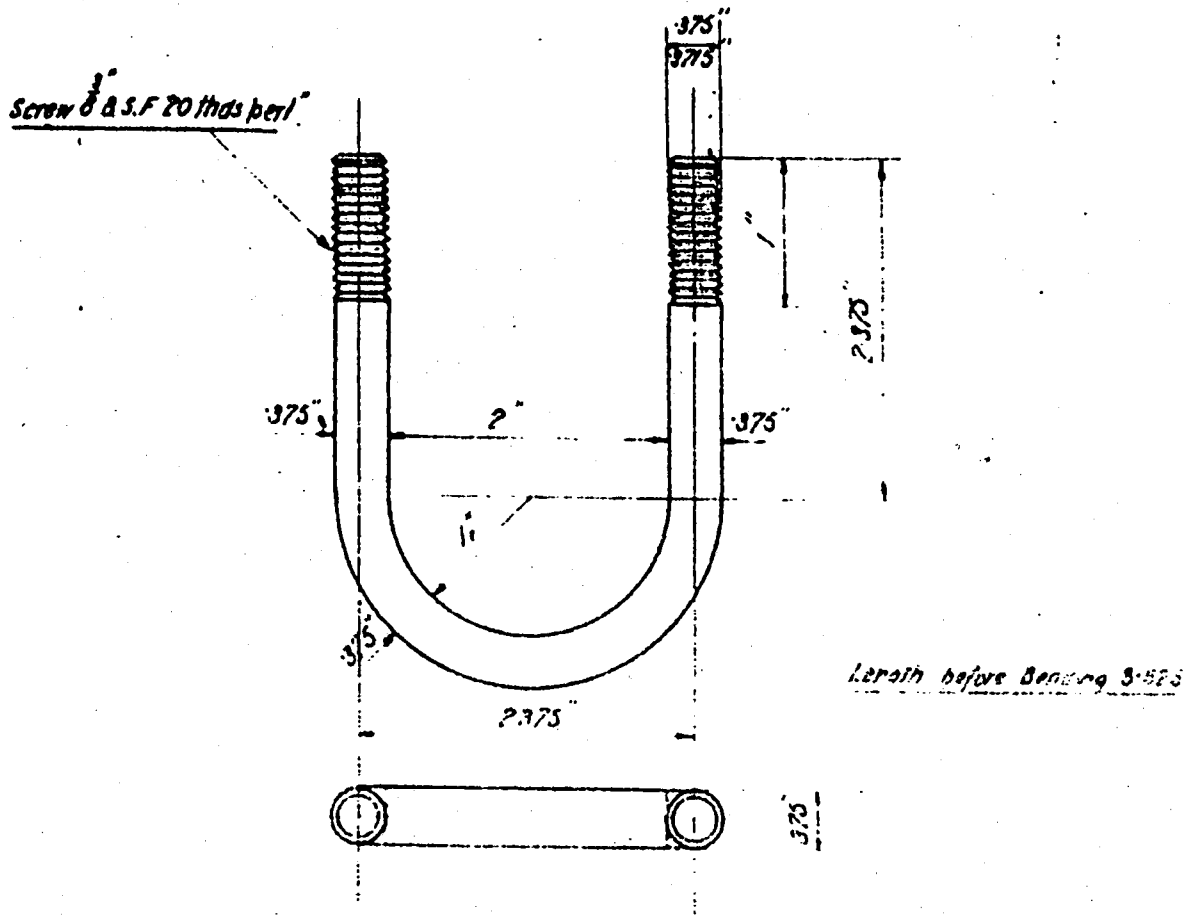

DRAWING No. 566—S	U BOLT	DRAWN BY
MATERIAL. 3% N.S.		TRACED BY
HEAT TREATMENT. A2.		CHECKED BY
		PASSED BY
		DATE

H665

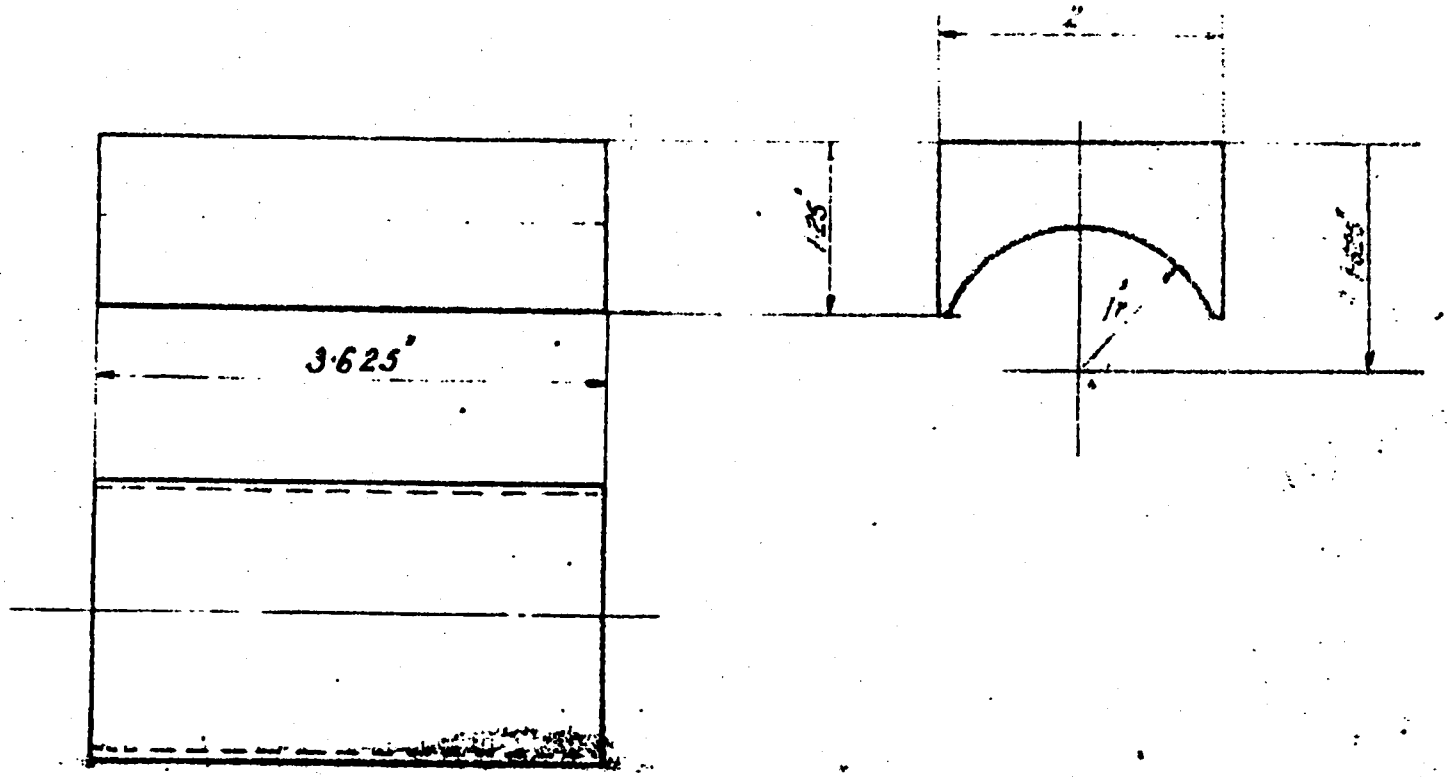

DRAWING No. 569-8	[illegible] PIECE	DRAWN BY
MATERIAL [illegible]	FOR SPARE WHEEL CARRIER	TRACED BY
HEAT TREATMENT		CHECKED BY
		PASSED BY
		DATE

H675

M/c Where marked :

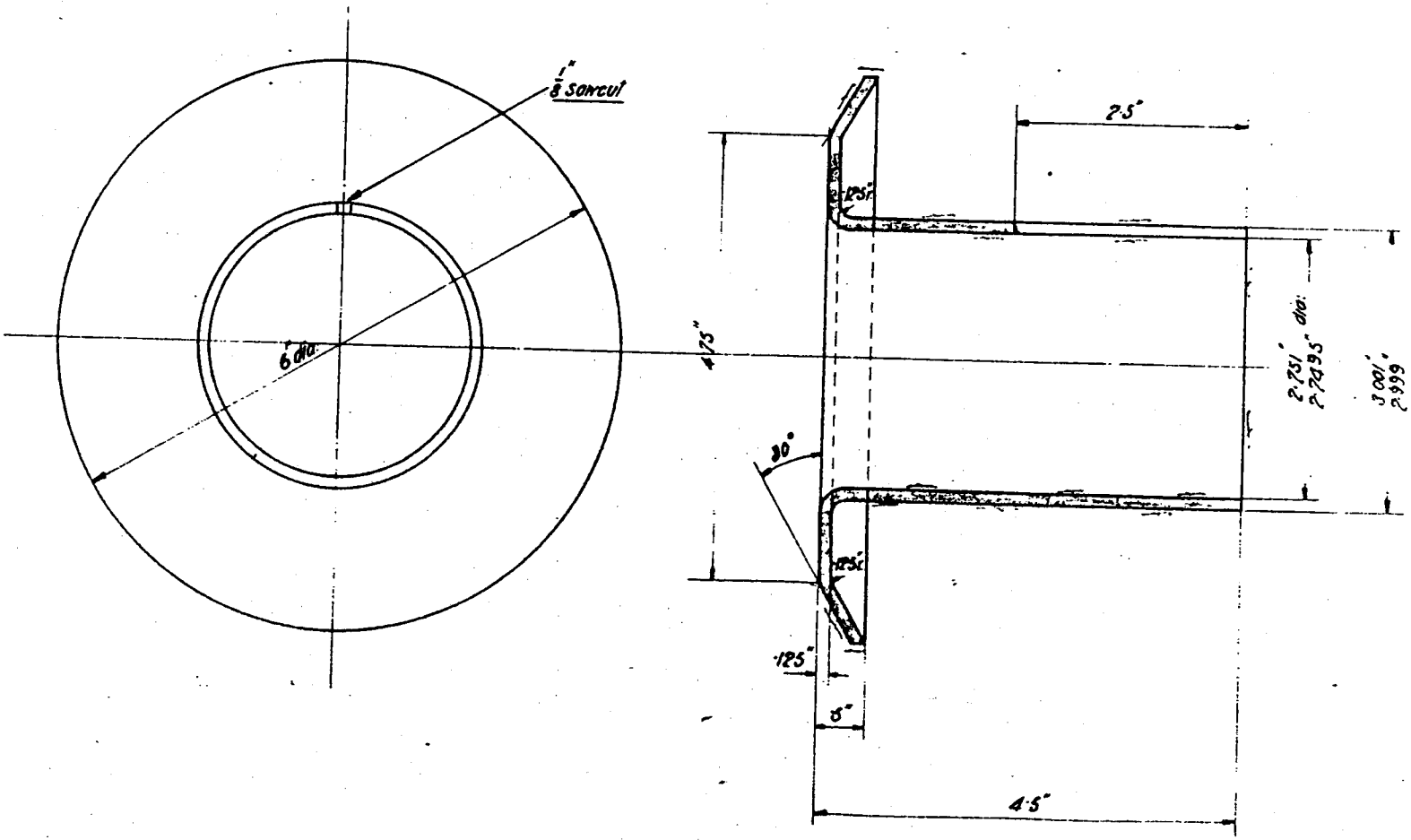

DRAWING No. 185 – 4	WHEEL STOP	DRAWN BY	[illegible]
MATERIAL M.I.		TRACED BY	[illegible]
HEAT TREATMENT		CHECKED BY	[illegible]
		PASSED BY	[illegible]
		DATE	[illegible]

H67S

M/c Where Imarked /

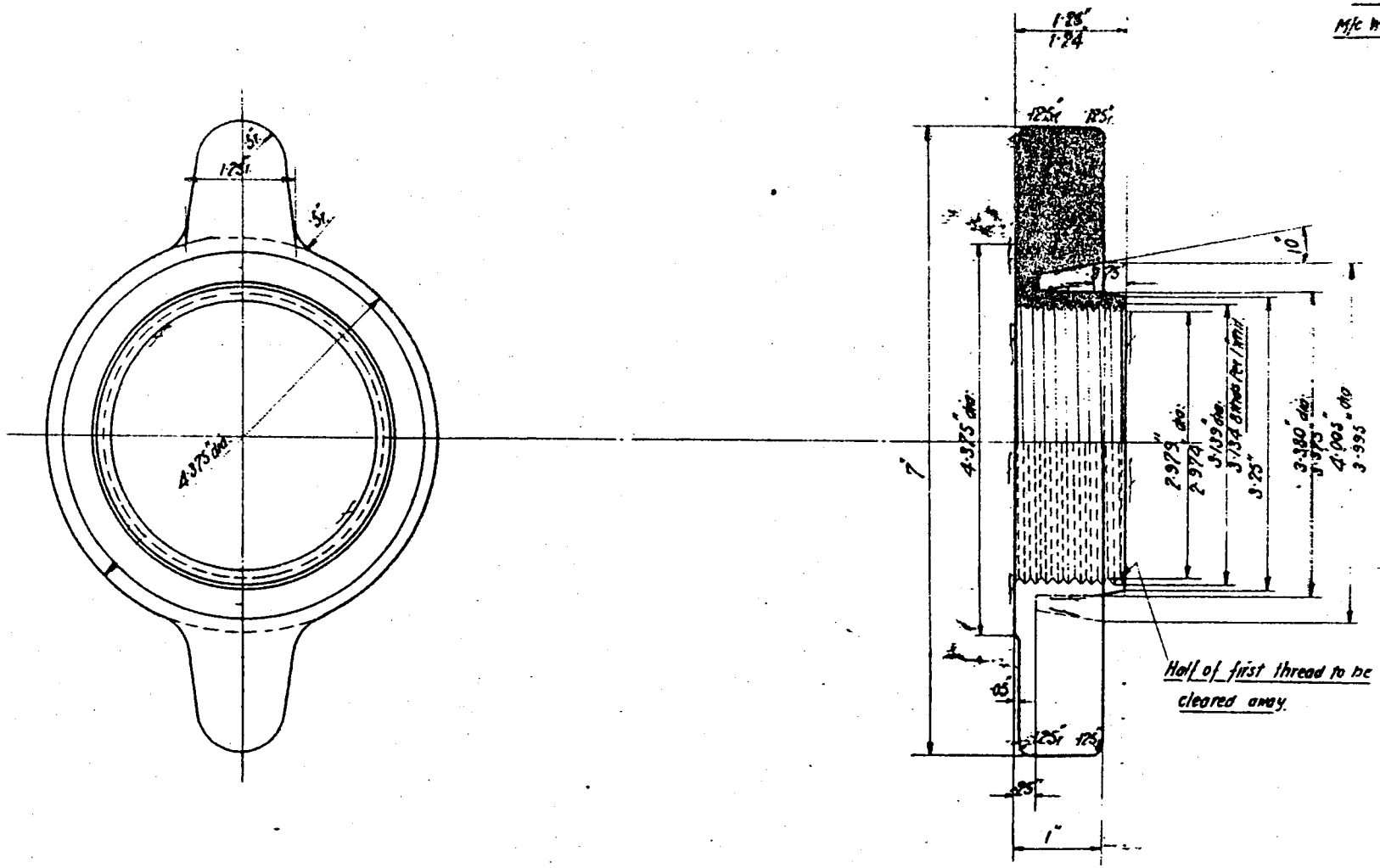

DRAWING No. ISG - 4	LOCKING RING FOR SPARE WHEEL CARRIER	DRAWN BY	E.W.H.
MATERIAL. M.I.		TRACED BY	S.H.
HEAT TREATMENT.		CHECKED BY	[illegible]
		PASSED BY	[illegible]
		DATE 29 - 7 - 19	

H679

M/c Where marked f.

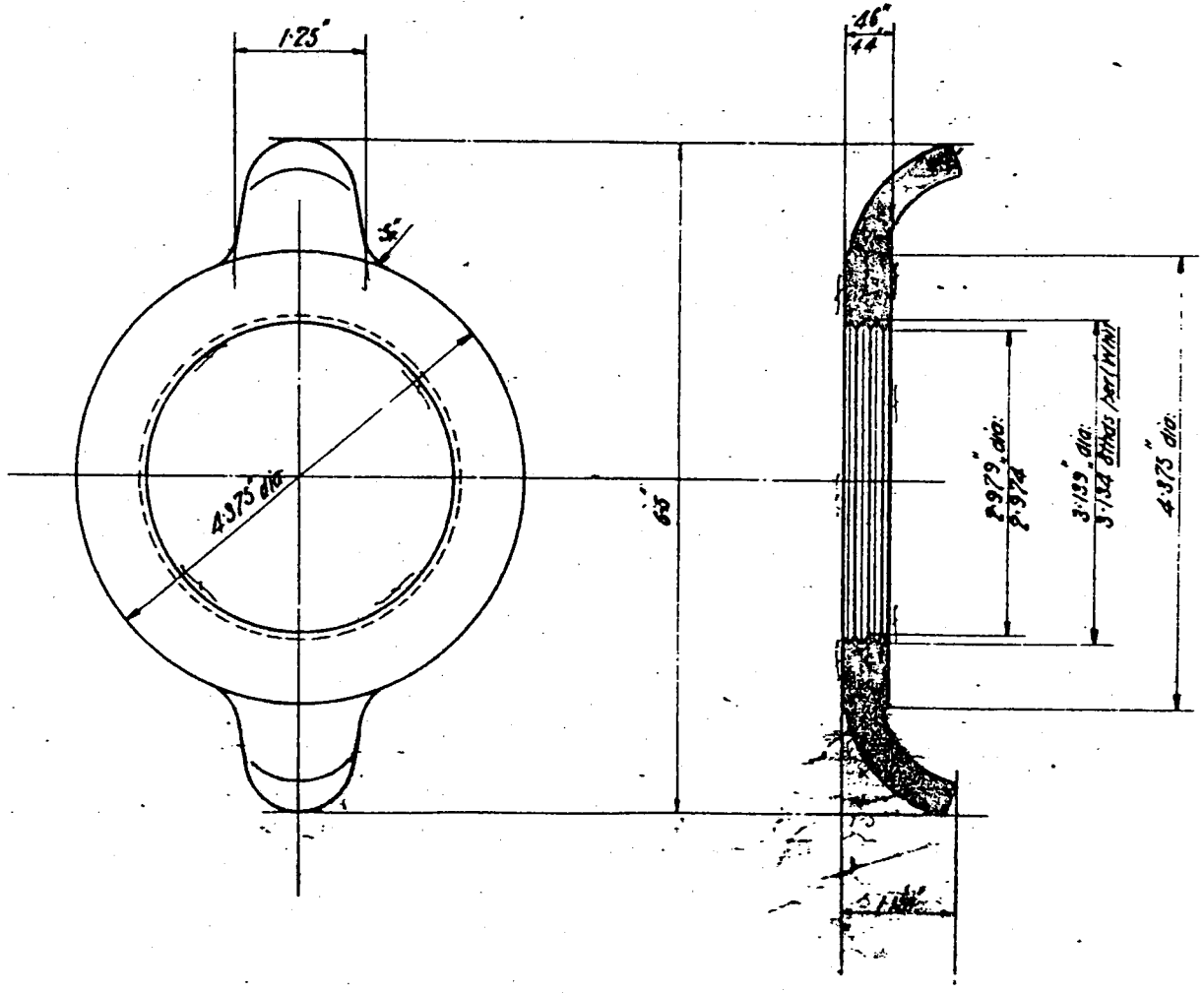

DRAWING No. 187-4

MATERIAL. M.1

FINISH. TREATMENT.

LOCKING NUT FOR SPARE WHEEL CARRIER.

DRAWN BY	
TRACED BY	
CHECKED BY	
PASSED BY	
DATE 15 - 8 - 19	

V 5643 H693

AL. ALLOY. L8.

M/C where marked

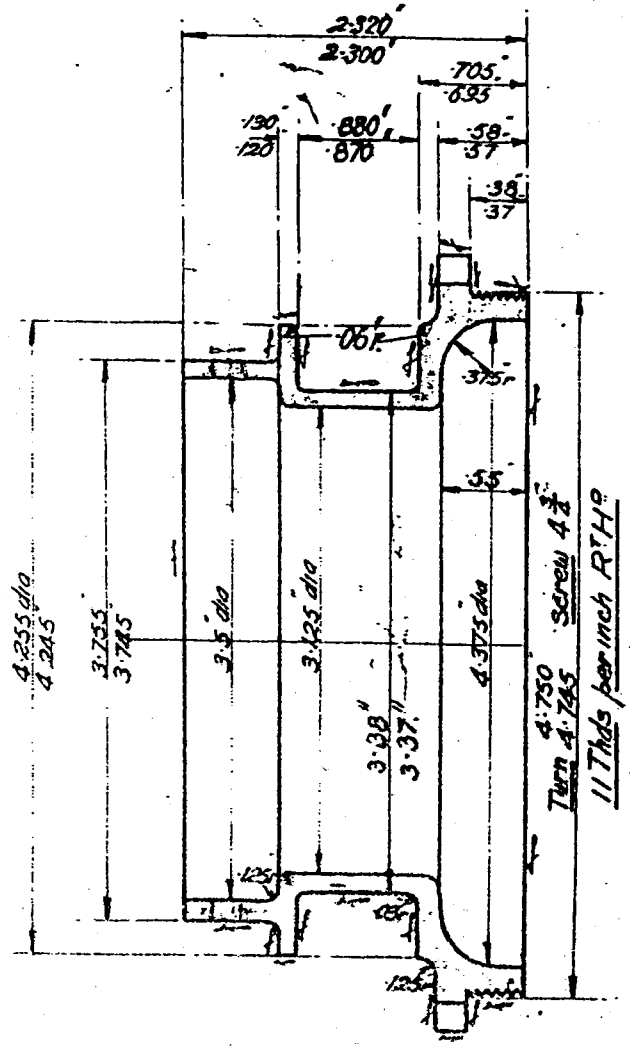

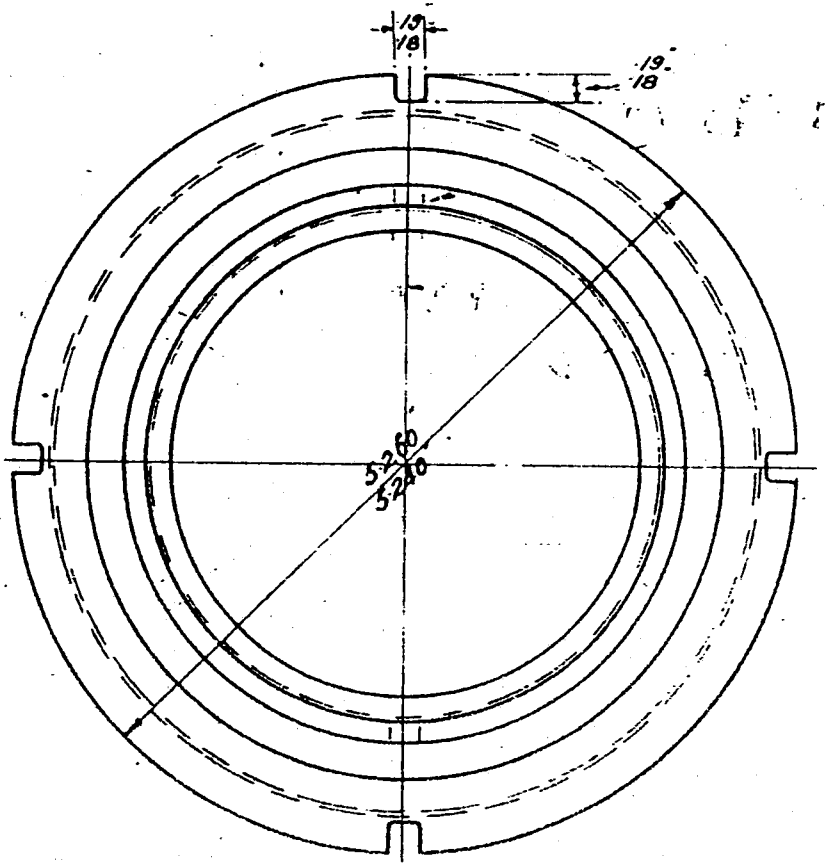

DRAWING No. 579-5

MATERIAL. C.I.

HEAT TREATMENT.

SPEEDOMETER PULLEY (ON UNIV. JOINT CASING)

DRAWN BY	W.B.
TRACED BY	
CHECKED BY	
PASSED BY	
DATE	25-7-19

H69S

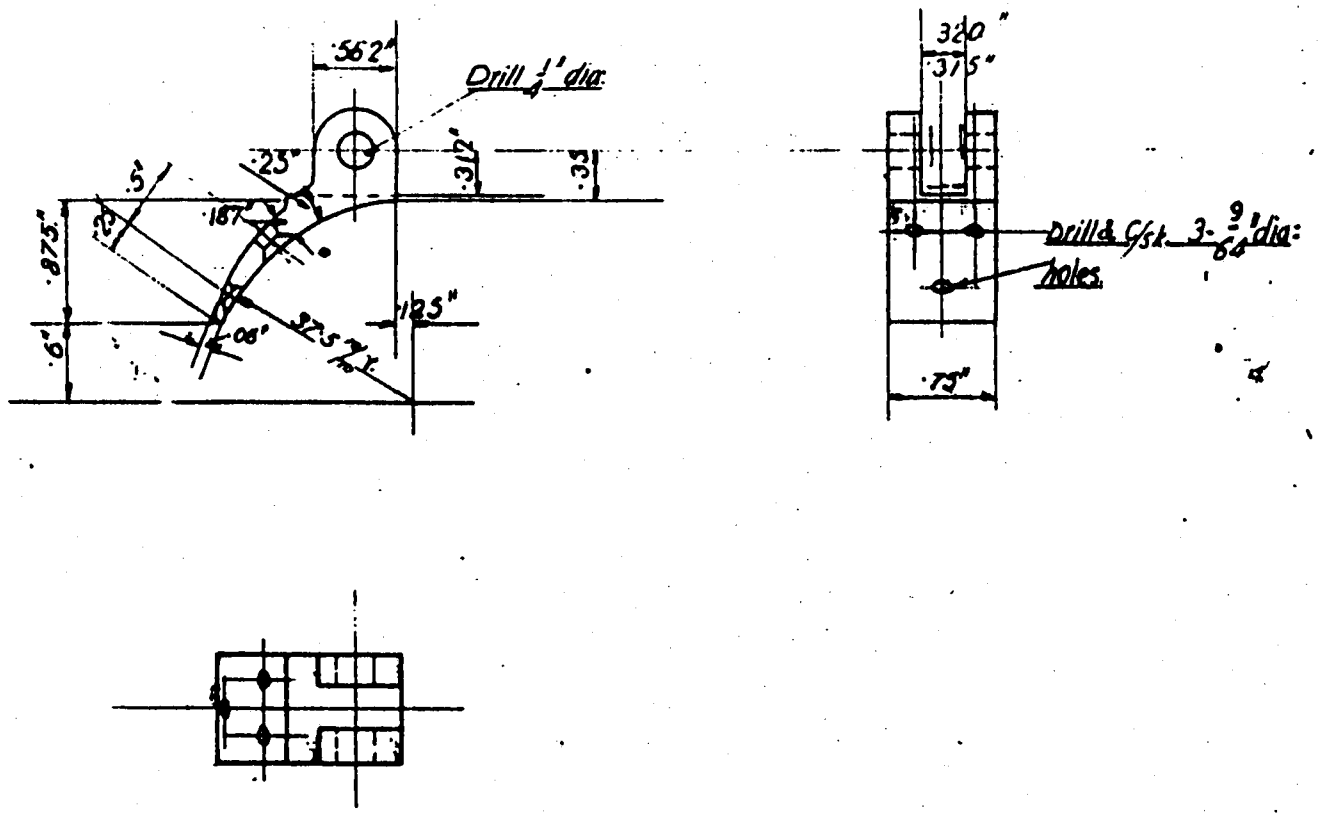

DRAWING Nº 584 – S	SADDLE PIECE	DRAWN BY
MATERIAL M.S.S.T.P.C. ·35%c		TRACED BY
HEAT TREATMENT.		CHECKED BY
		PASSED BY
		DATE 29-7-19.

H699

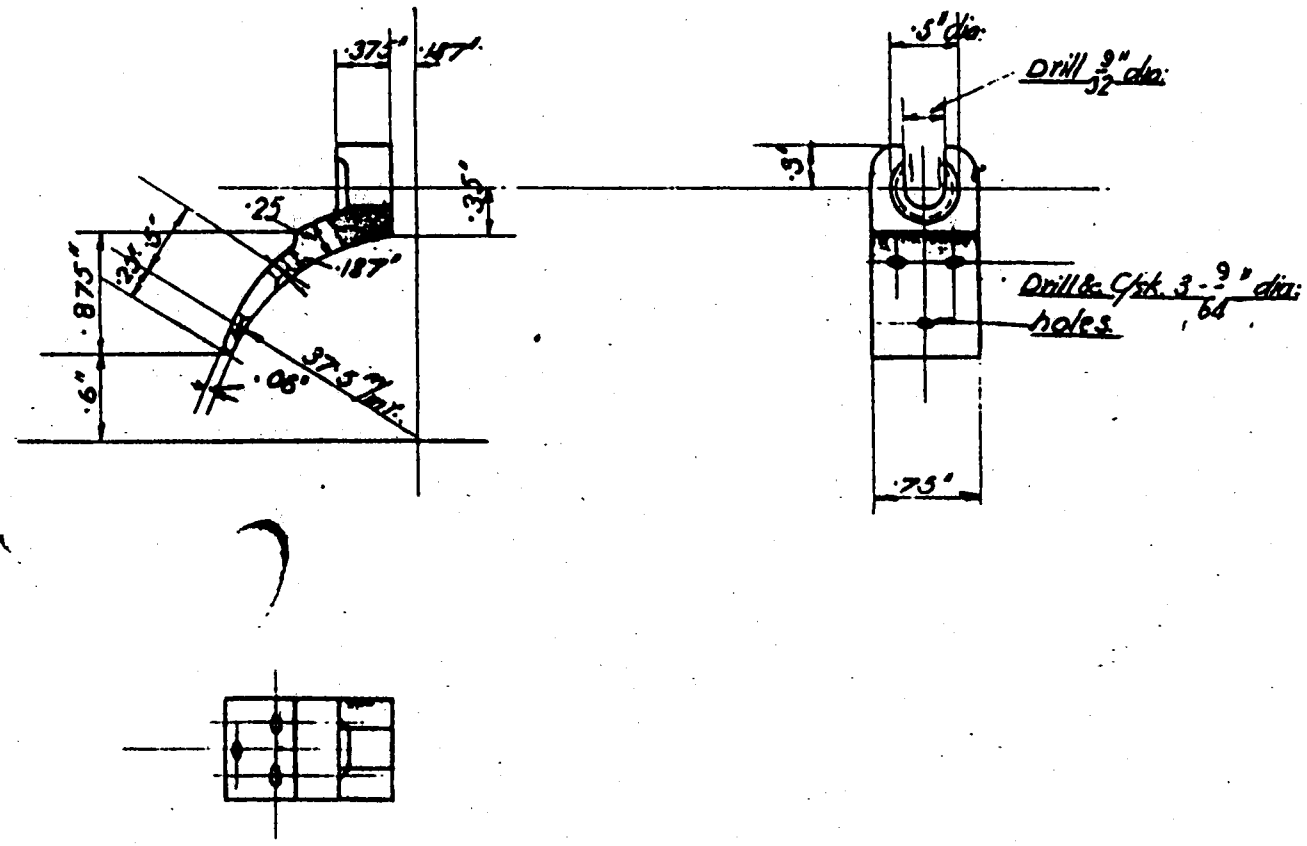

DRAWING No. 584-S	SADDLE PIECE	DRAWN BY	[illegible]
MATERIAL. MSSTPC. ·35% c.		TRACED BY	[illegible]
HEAT TREATMENT.		CHECKED BY	[illegible]
		PASSED BY	[illegible]
		DATE 29. 7. 19.	

H704

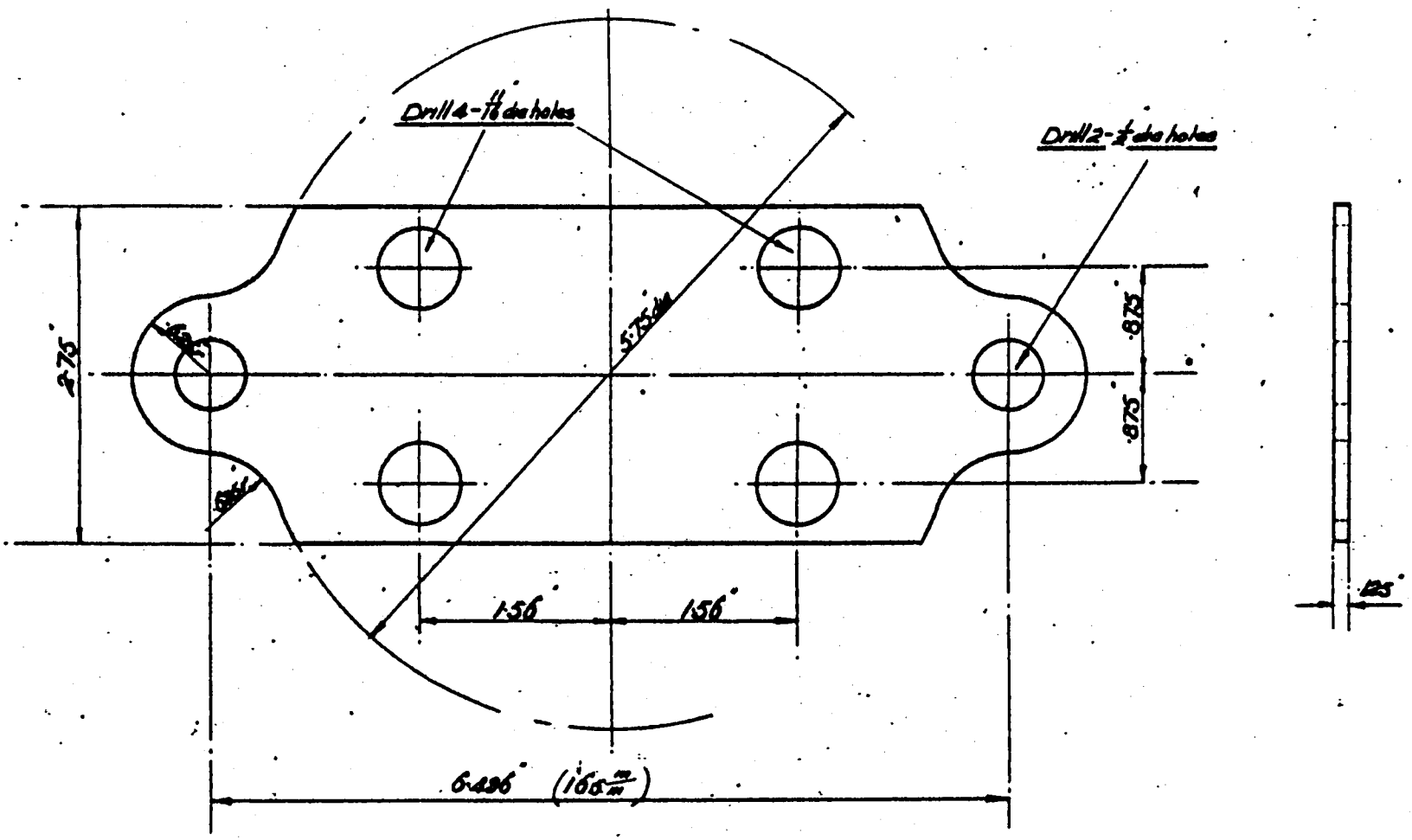

DRAWING No. 587-S	PACKING PLATE FOR SHOCK ABSORBER	DRAWN BY	
MATERIAL M.S. 20% C PRESS		TRACED BY	
HEAT TREATMENT.		CHECKED BY	
		PASSED BY	
		DATE	11-8-19

H 71S

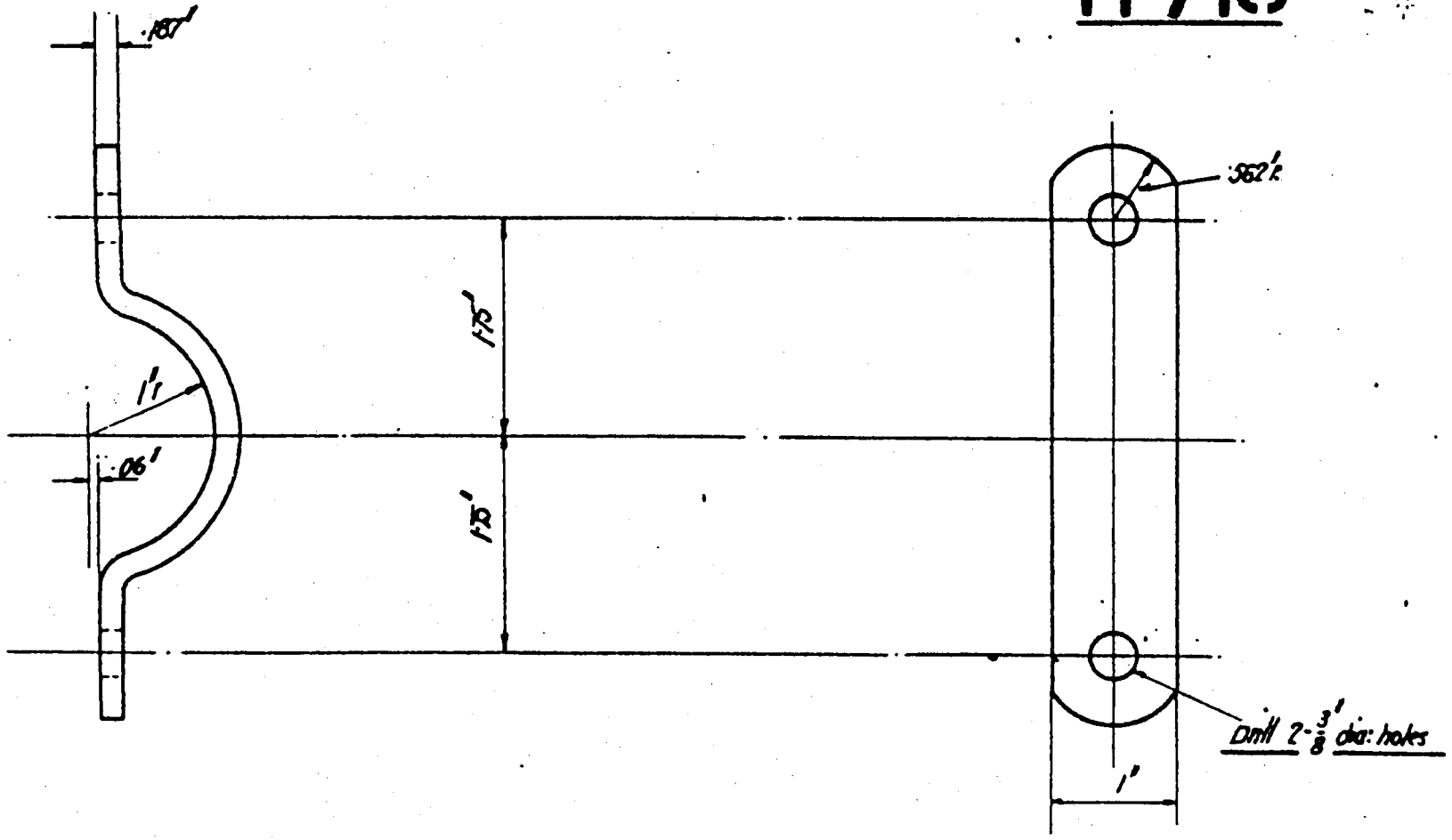

DRAWING No. 594—S.
MATERIAL. M.S.
HEAT TREATMENT.

CAP FOR EXHAUST PIPE STAY

DRAWN BY	
TRACED BY	
CHECKED BY	
PASSED BY	
DATE 10/9/12	

H731

machine all over

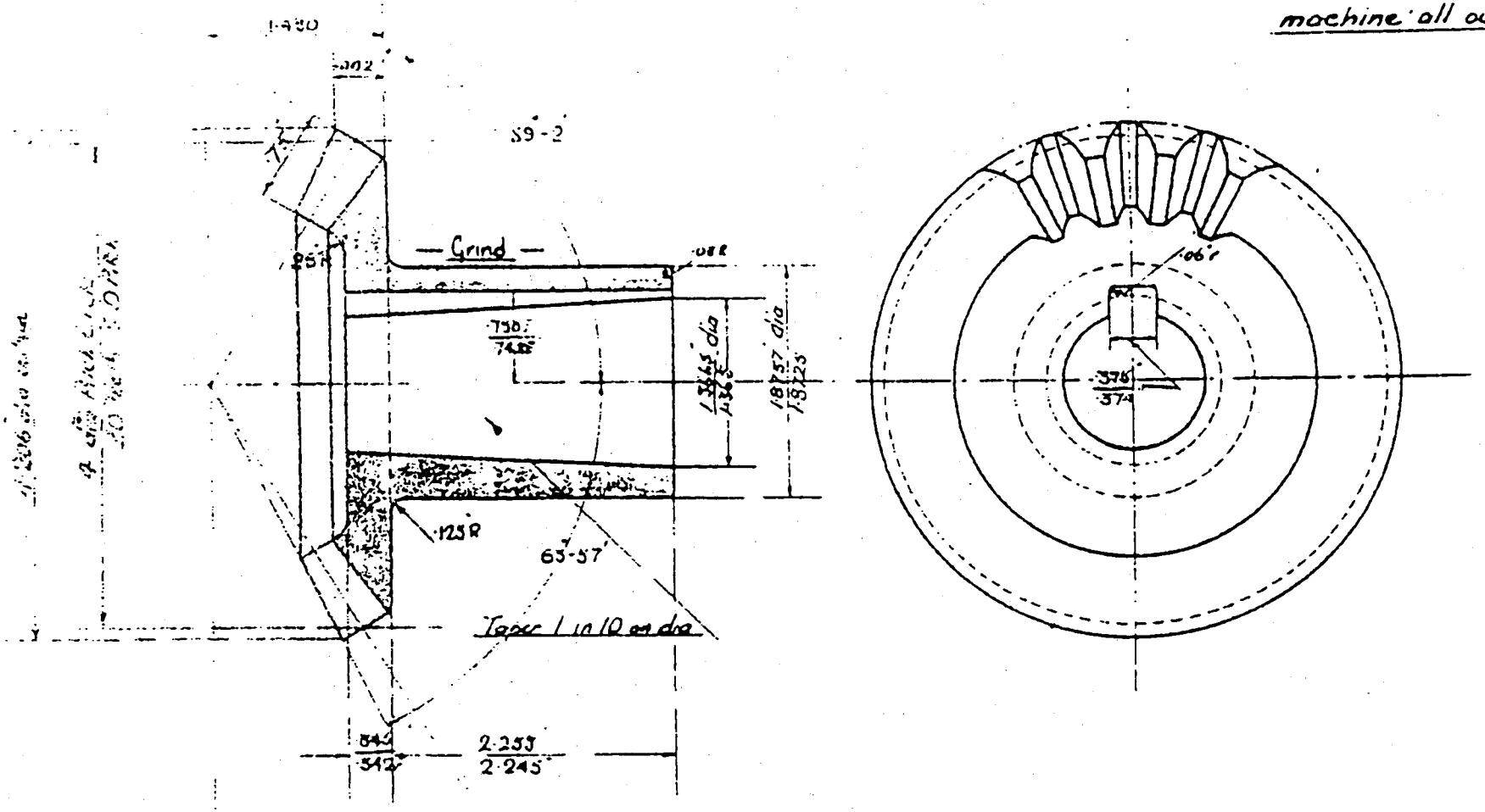

DRAWING No. 701 — S	—DIFFERENTIAL SUN BEVEL WHEEL—	DRAWN BY	E.L.C
MATERIAL: C.H.N.S. stpg.		TRACED BY	[illegible]
HEAT TREATMENT: E.		CHECKED BY	[illegible]
		PASSED BY	[illegible]
		DATE 17-8-18	

H732

m/c where marked "f"

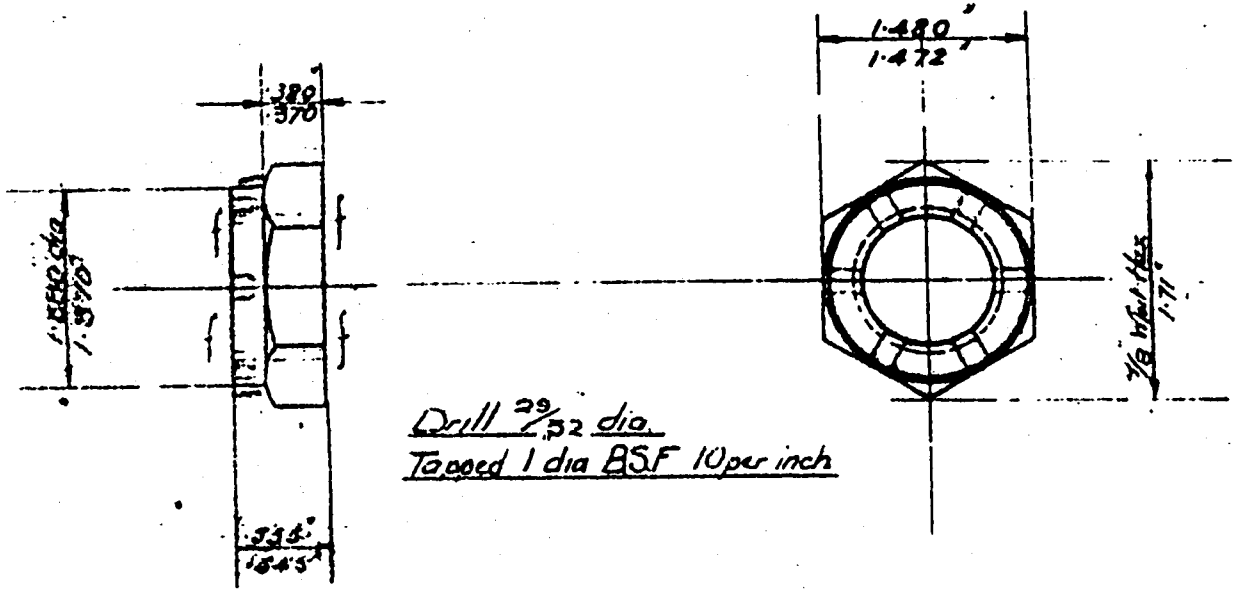

DRAWING No. 701 — S	— LOCK NUT FOR SUN BEVEL WHEEL —	DRAWN BY	E.L.C.
MATERIAL [illegible]		TRACED BY	[illegible]
HEAT TREATMENT None		CHECKED BY	[illegible]
		PASSED BY	[illegible]
		DATE 17-9-19	

H744

machine where marked

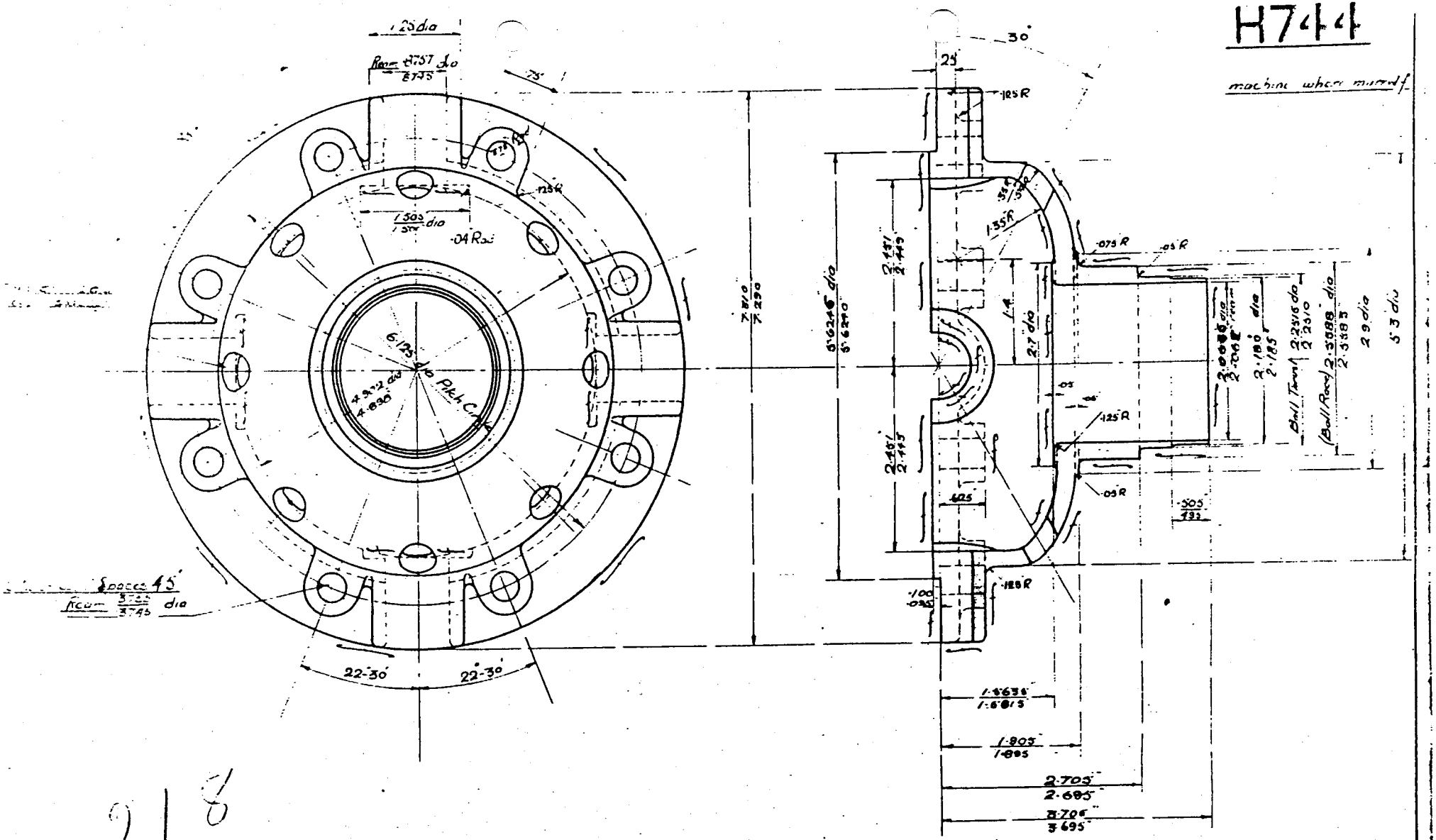

218

DRAWING No. 218—4

MATERIAL. M.S. STPG. 35 C.

HEAT TREATMENT.

—DIFFERENTIAL CAGE— [SPIGOT] —

DRAWN BY	E.L.C
TRACED BY	[illegible]
CHECKED BY	[illegible]
PASSED BY	[illegible]
DATE	10-9-19

H.757.

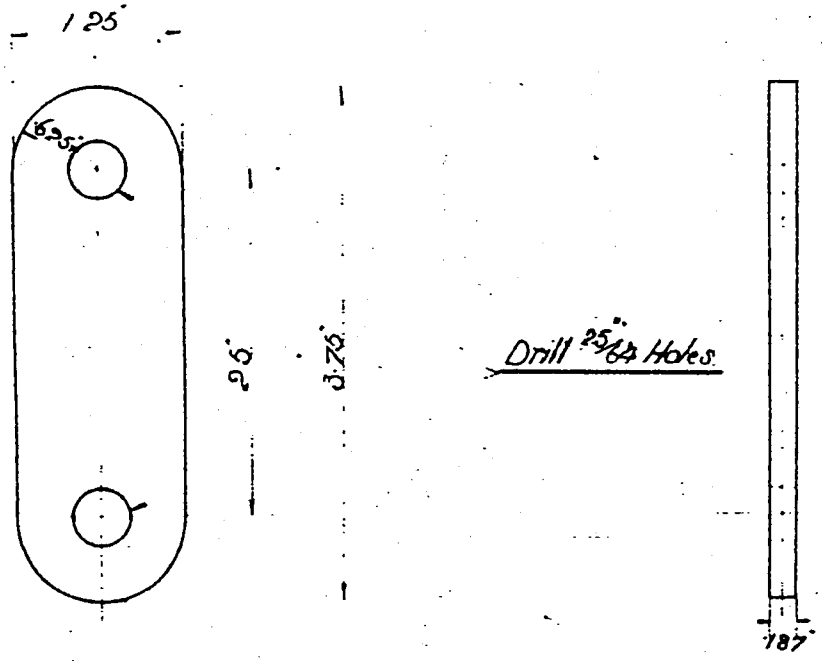

DRAWING No. 598 – S

MATERIAL. M.S.

HEAT TREATMENT.

STIFFENING PLATE FOR WING STAYS

DRAWN BY	
TRACED BY	
CHECKED BY	
PASSED BY	
DATE	22/3/19

H75S

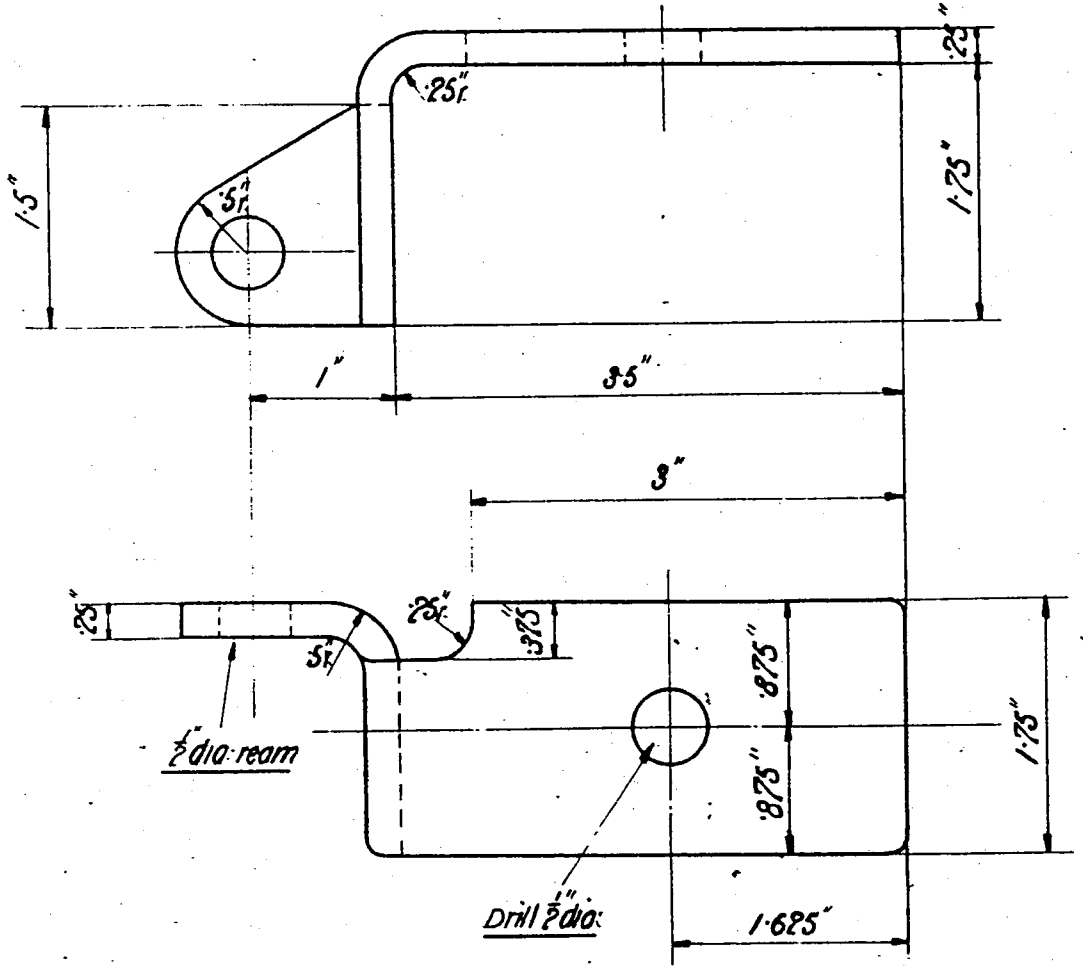

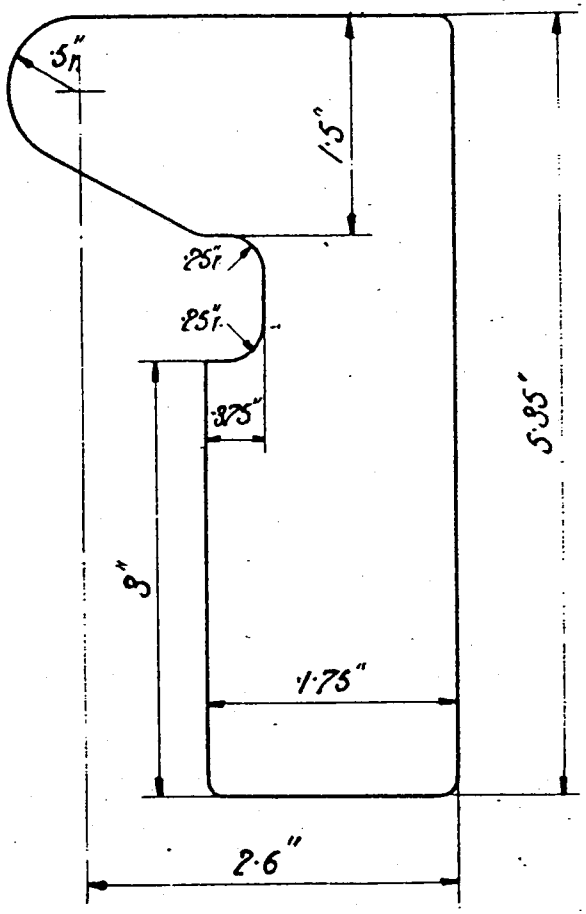

Outline of Plate Before bending

DRAWING No. 599 – S	
MATERIAL. M.S.	PLATE FOR BALL END L.H.
HEAT TREATMENT.	

DRAWN BY	S.H.
TRACED BY	S.H.
CHECKED BY	
PASSED BY	
DATE 25 - 8 - 19	

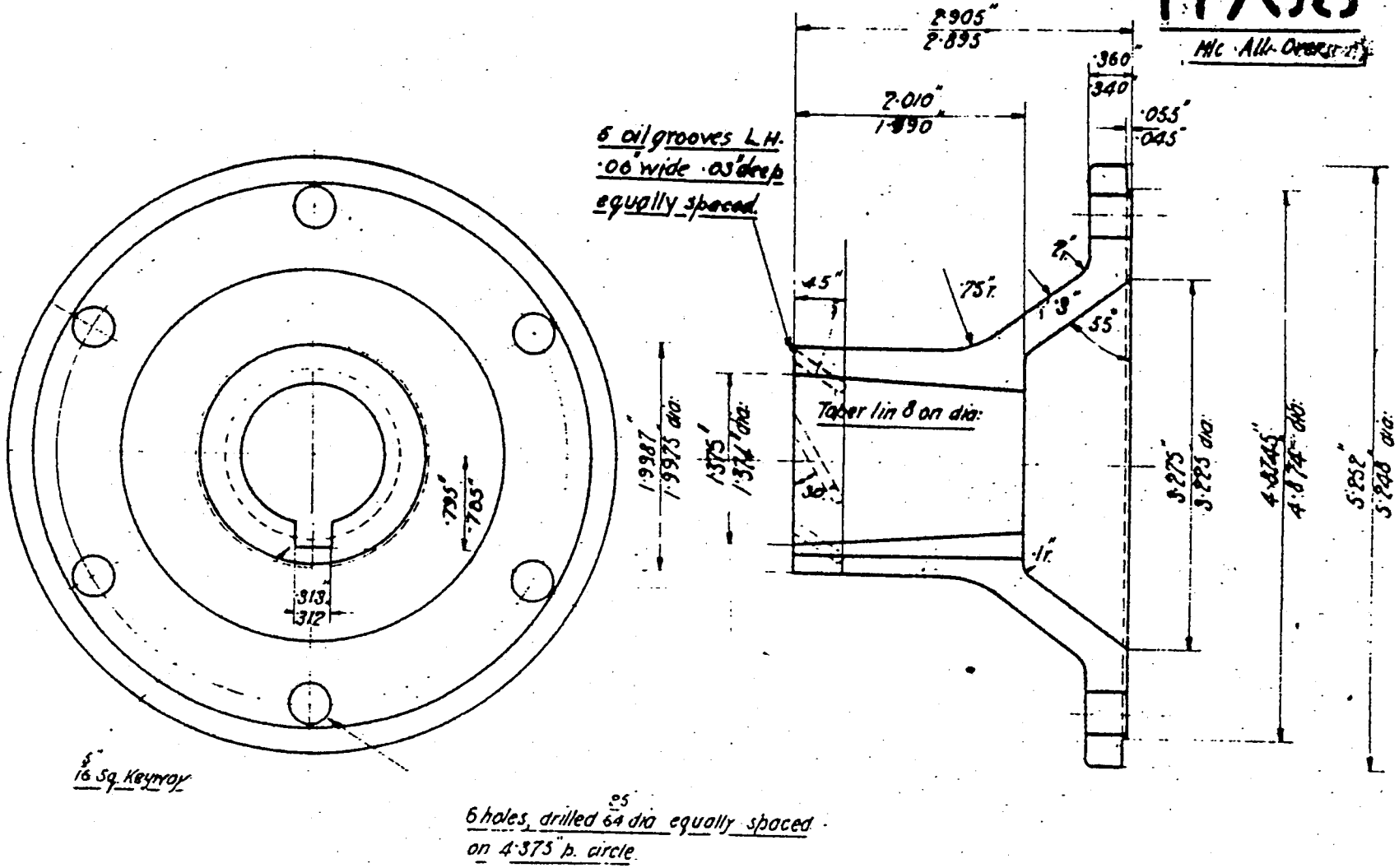

DRAWING No. 653 – S	1ST. REDUCTION PINION FLANGE	DRAWN BY	H.M.B.
MATERIAL. M.S. STPG. 30% C.		TRACED BY	S.H.
HEAT TREATMENT.		CHECKED BY	[illegible]
		PASSED BY	[illegible]
		DATE 26 - 9 - 19	

H7S7

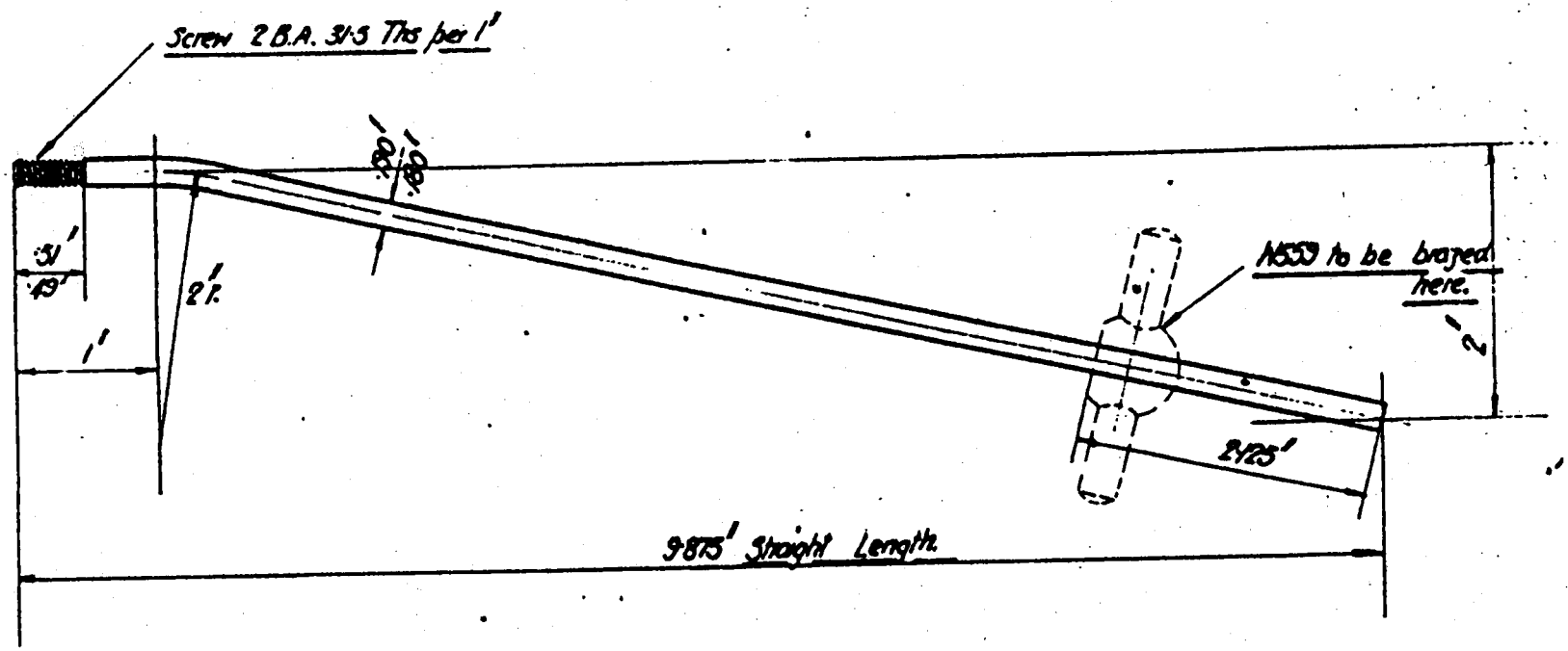

DRAWING No. 6S1 — S	REVERSE GATE STOP ROD	DRAWN BY	C.J.T.
MATERIAL B.D.S. ·15% c.		TRACED BY	
HEAT TREATMENT. NONE.		CHECKED BY	
		PASSED BY	
		DATE	18/3/19.

H799

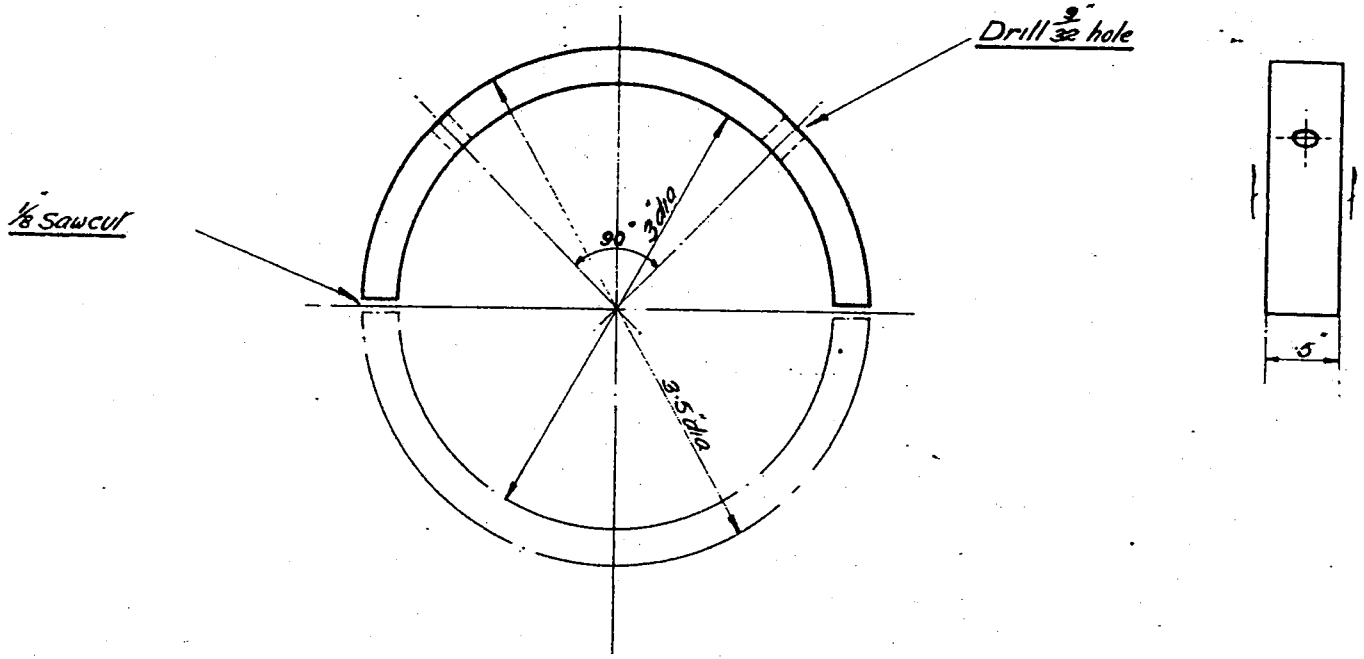

DRAWING Nº. 664 – S	TORQUE SUSPENSION FORK STOP	DRAWN BY
MATERIAL. W. S. T.		TRACED BY
HEAT TREATMENT.		CHECKED BY
		PASSED BY
		DATE 1-9-19

H.S50

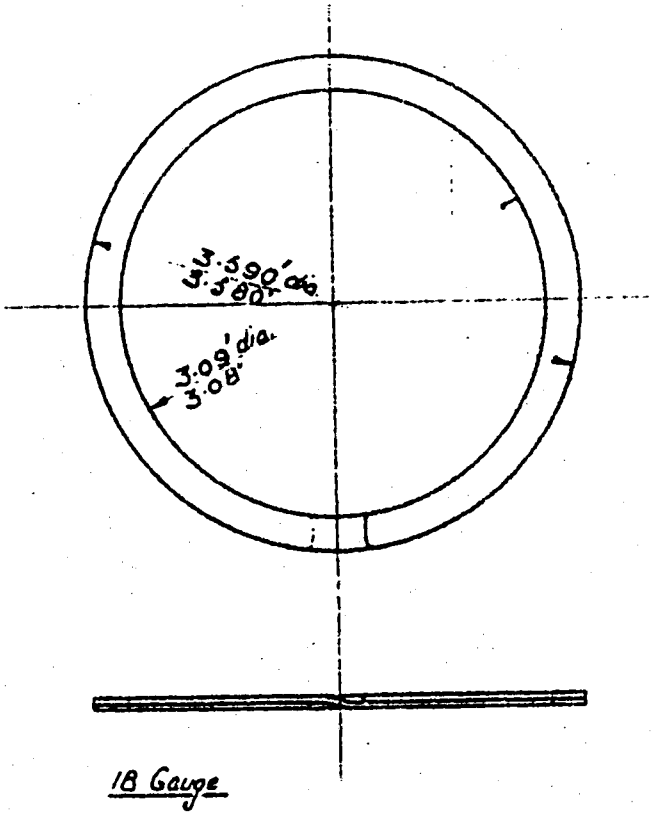

18 Gauge

DRAWING No. 765—S

MATERIAL. SPG STEEL

HEAT TREATMENT.

SPRING WASHER.

DRAWN BY	
TRACED BY	
CHECKED BY	
PASSED BY	
DATE 23-10-19.	

HS51

M/c where marked f

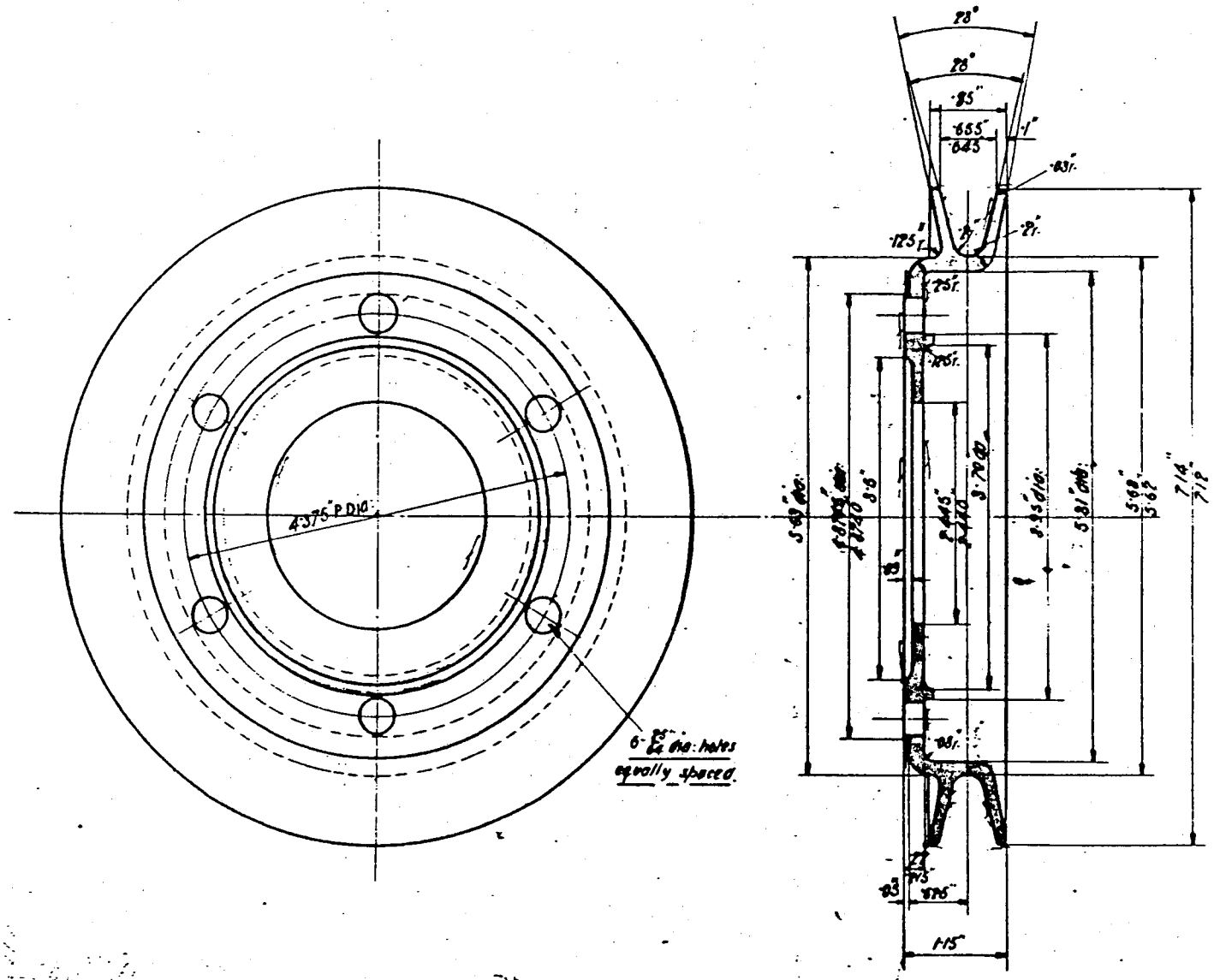

DRAWING No. 250-4	DYNAMO PULLEY	DRAWN BY	S.H.
MATERIAL. ALUM.		TRACED BY	S.H.
HEAT TREATMENT.		CHECKED BY	[illegible]
		PASSED BY	[illegible]
		DATE 31-10-19	

HS55

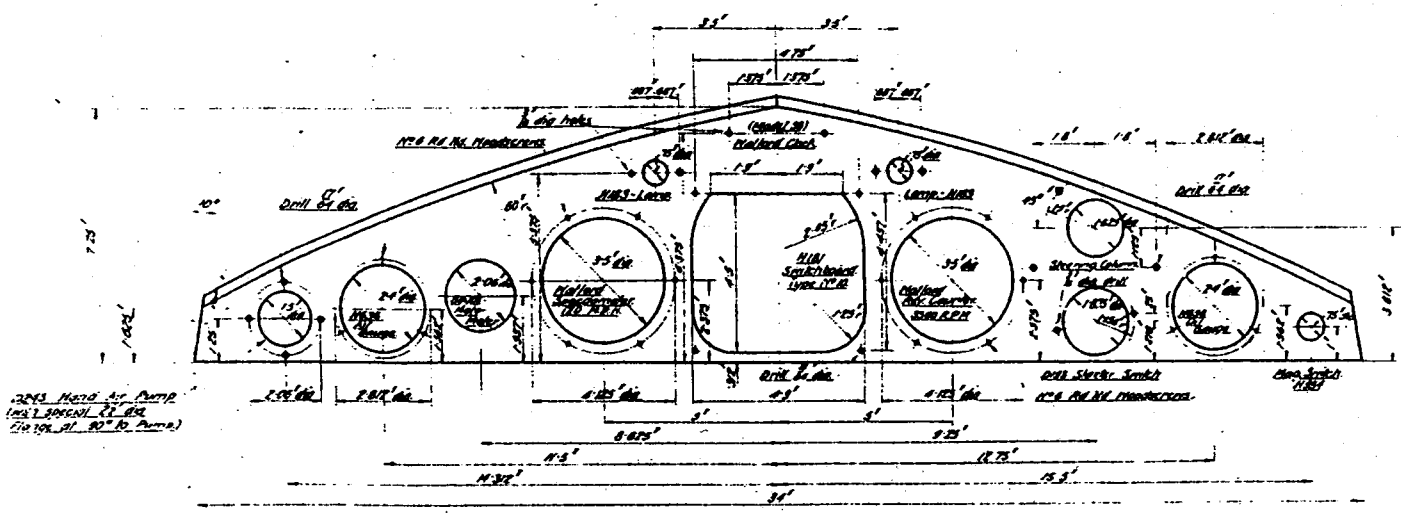

DRAWING Nº 398-2	INSTRUMENT BOARD.
MATERIAL W(QM)	
HEAT TREATMENT N' NE	

DRAWN BY	
TRACED BY	
CHECKED BY	
PASSED BY	
DATE	

HS56

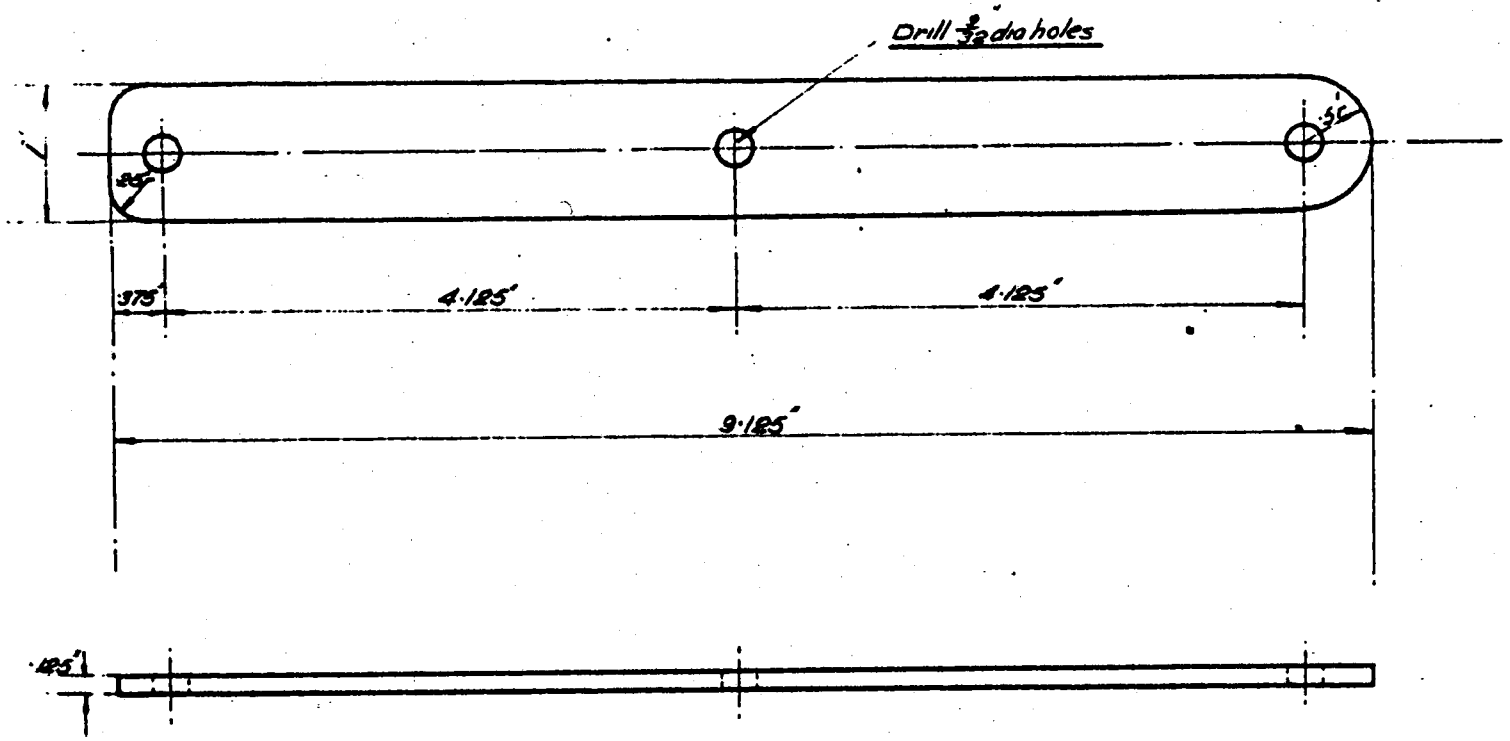

DRAWING Nº. 761—S	HANGER FOR FRONT Nº PLATE	DRAWN BY
MATERIAL. M. S.		TRACED BY
HEAT TREATMENT.		CHECKED BY
		PASSED BY
		DATE 20·10·19

HS57

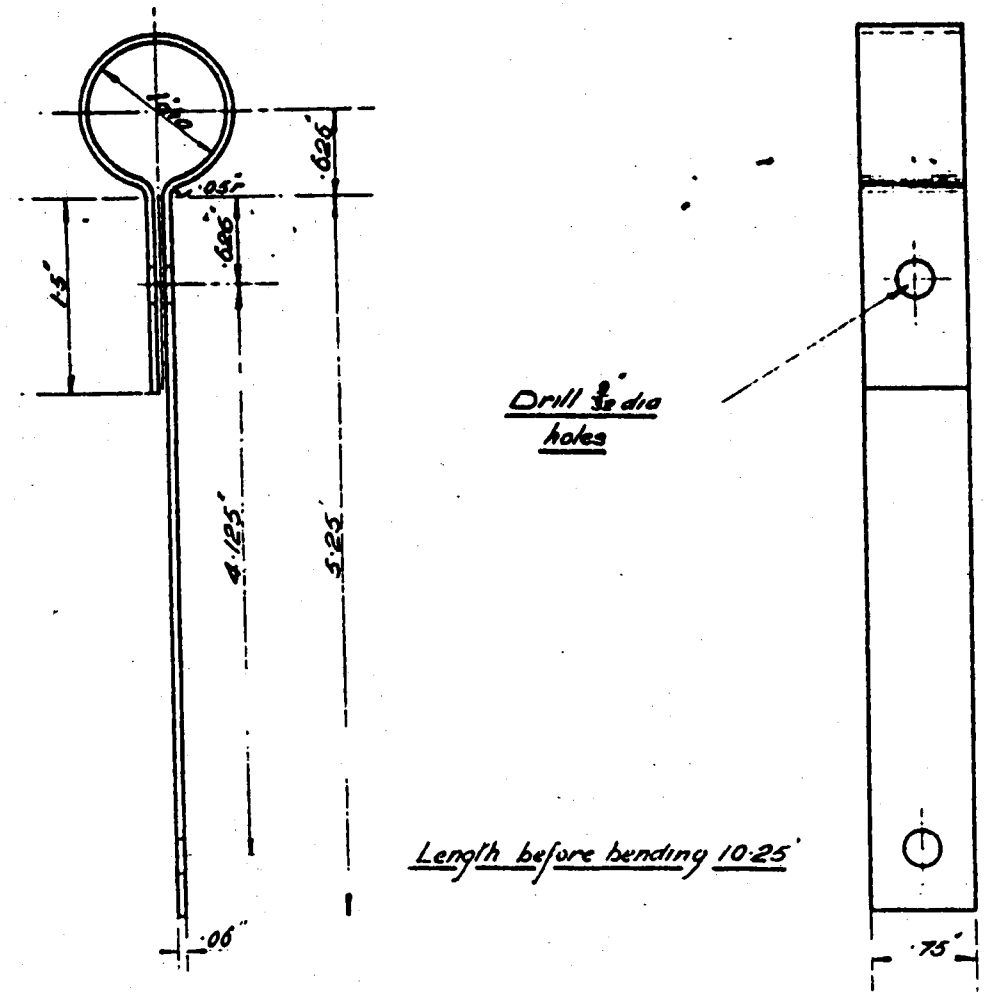

DRAWING Nº. 761—S	HANGER FOR BACK Nº PLATE	DRAWN BY	[illegible]
MATERIAL. STRIP BRASS		TRACED BY	[illegible]
HEAT TREATMENT.		CHECKED BY	[illegible]
		PASSED BY	[illegible]
		DATE 20 [illegible]	

H960

M/c where marked /
Note: To be made from Stamping P693 End to be cut off and boss to be forged

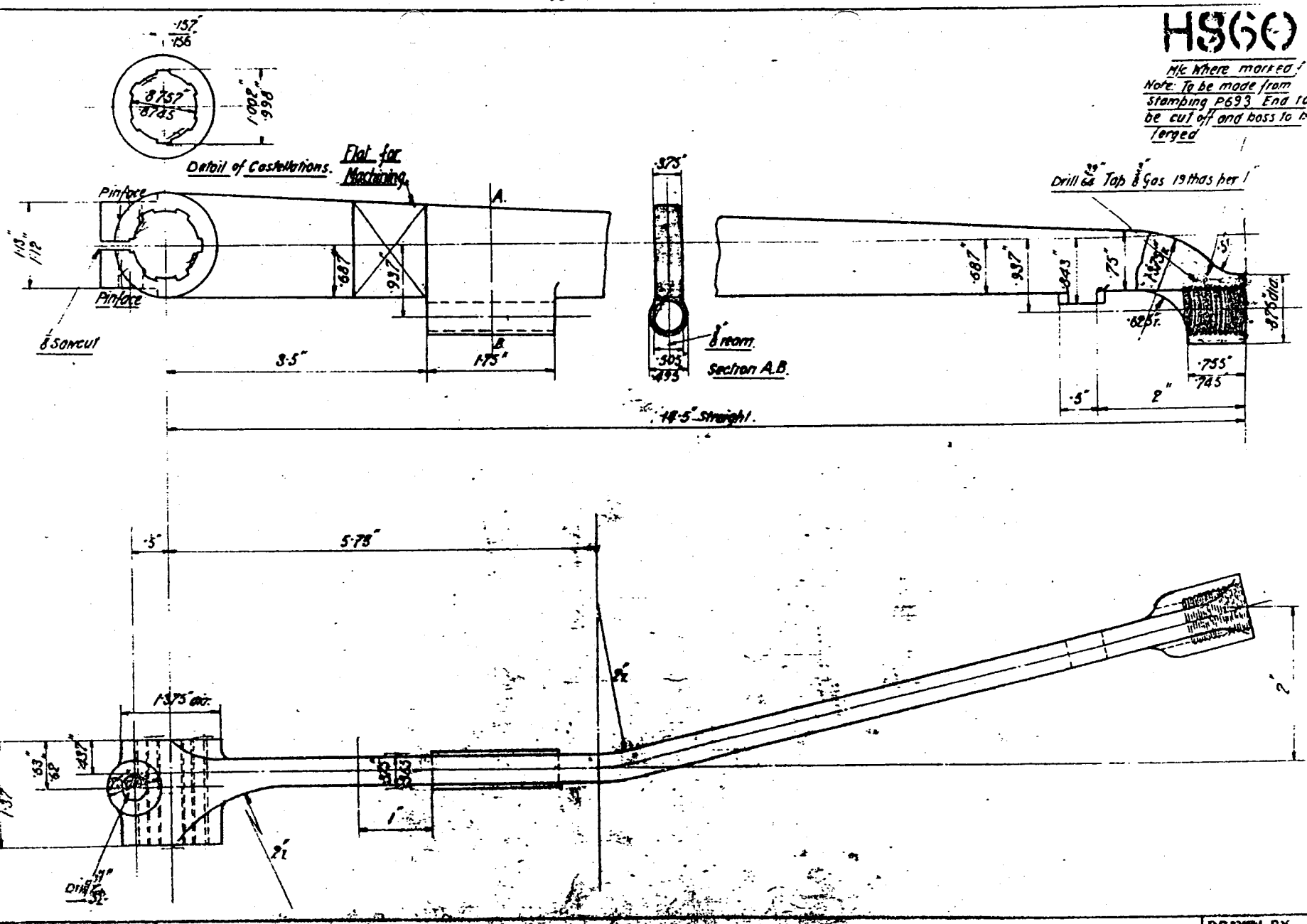

DRAWING No. 232 - 4	CHANCE SPEED HAND LEVER
MATERIAL M.S. STPG. ⅜" C.	
HEAT TREATMENT A1	

DRAWN BY	S.H.
TRACED BY	S.H.
CHECKED BY	
PASSED BY	
DATE 12 - 3 - 19	

HSG1

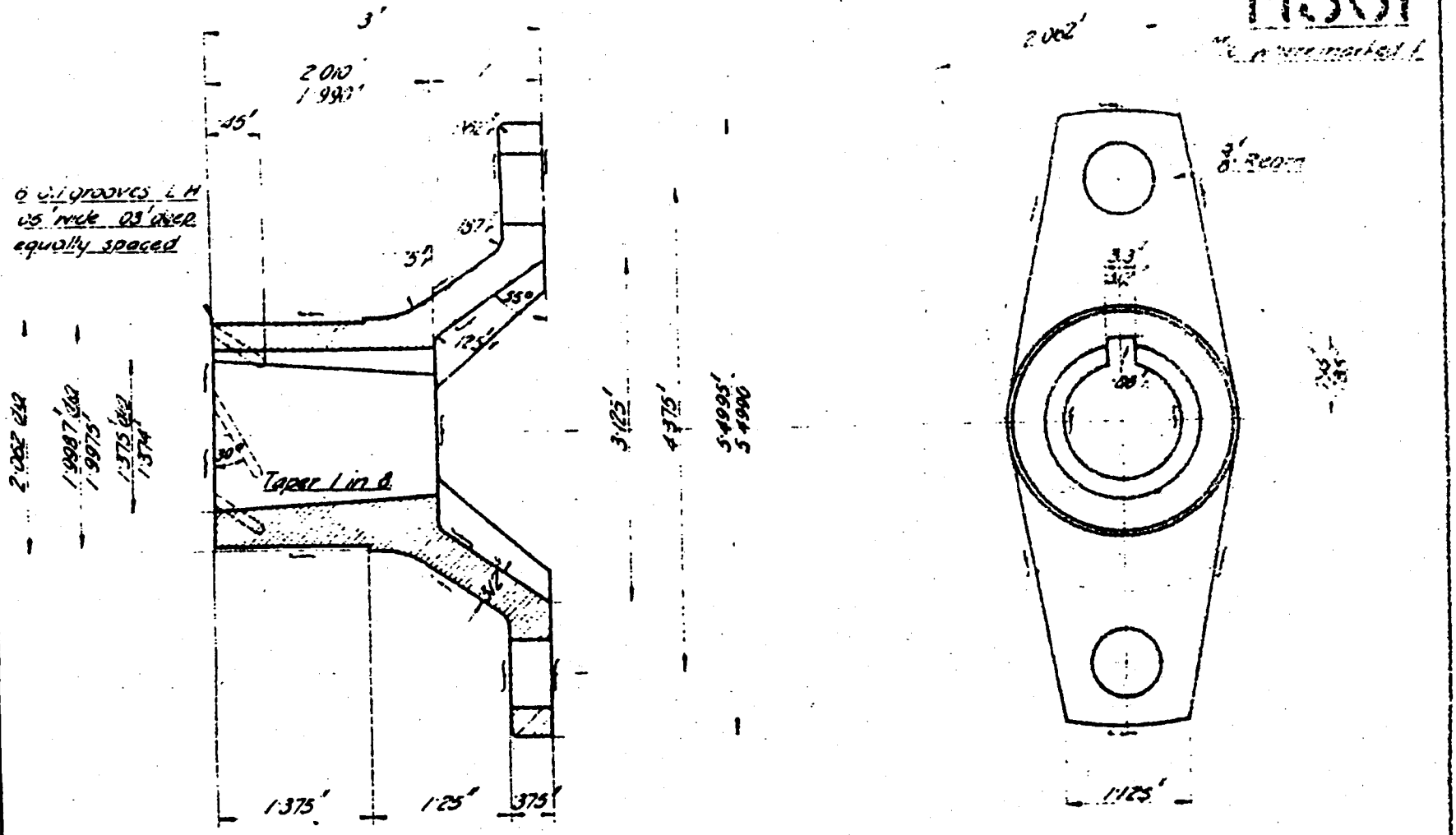

Made from R282

DRAWING No. S7S-S	
MATERIAL M.S. STIPC.40C	1ST. REDUCTION PINION FLANGE.
HEAT TREATMENT. NONE	

DRAWN BY	
TRACED BY	
CHECKED BY	
PASSED BY	
DATE 6-6-77	

HS93

M/c all over.

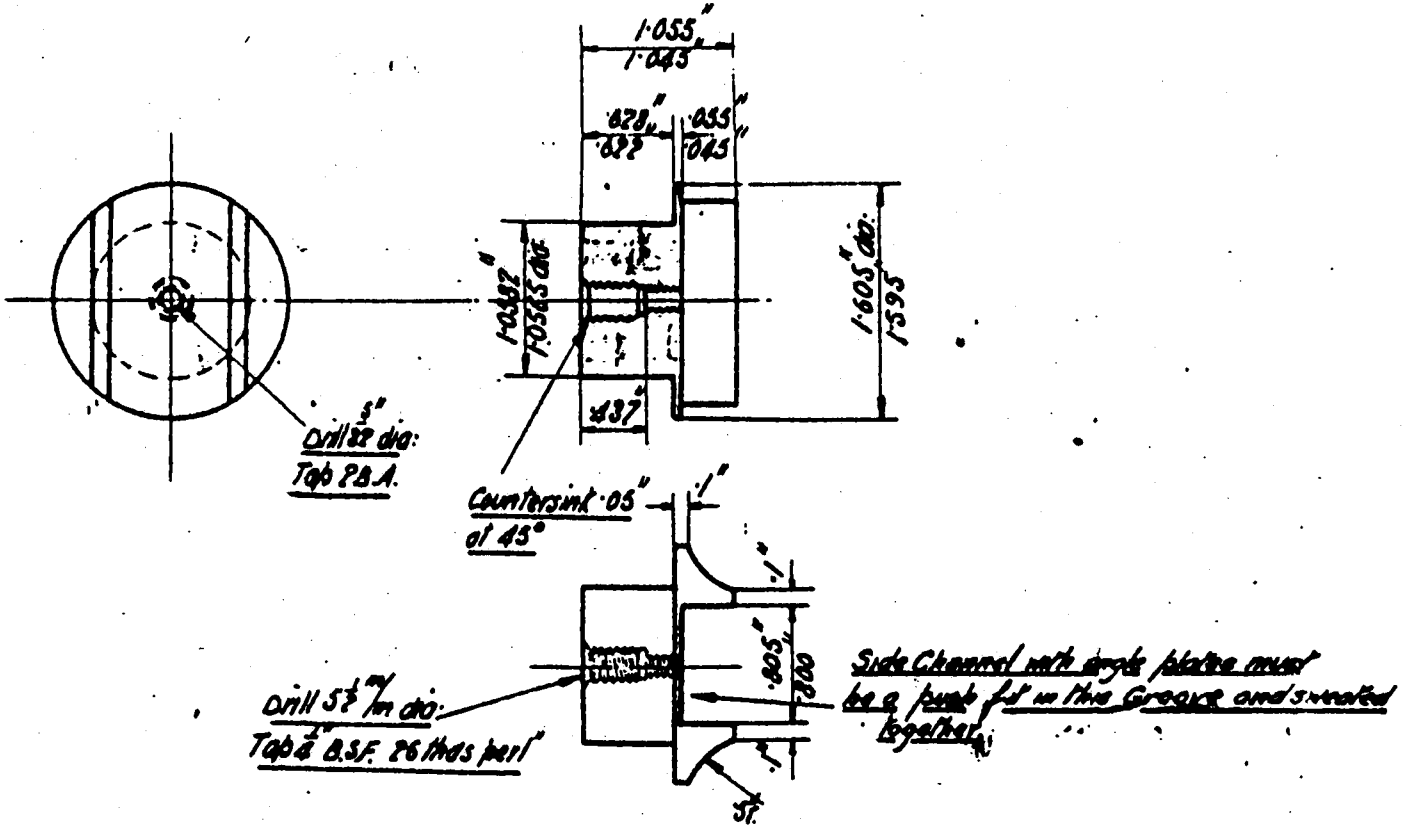

DRAWING No. 659-S	TOP JOINT	DRAWN BY	H.B.
MATERIAL. C.M.		TRACED BY	S.H.
HEAT TREATMENT.		CHECKED BY	
		PASSED BY	
		DATE 11- 12- 19	

HS95

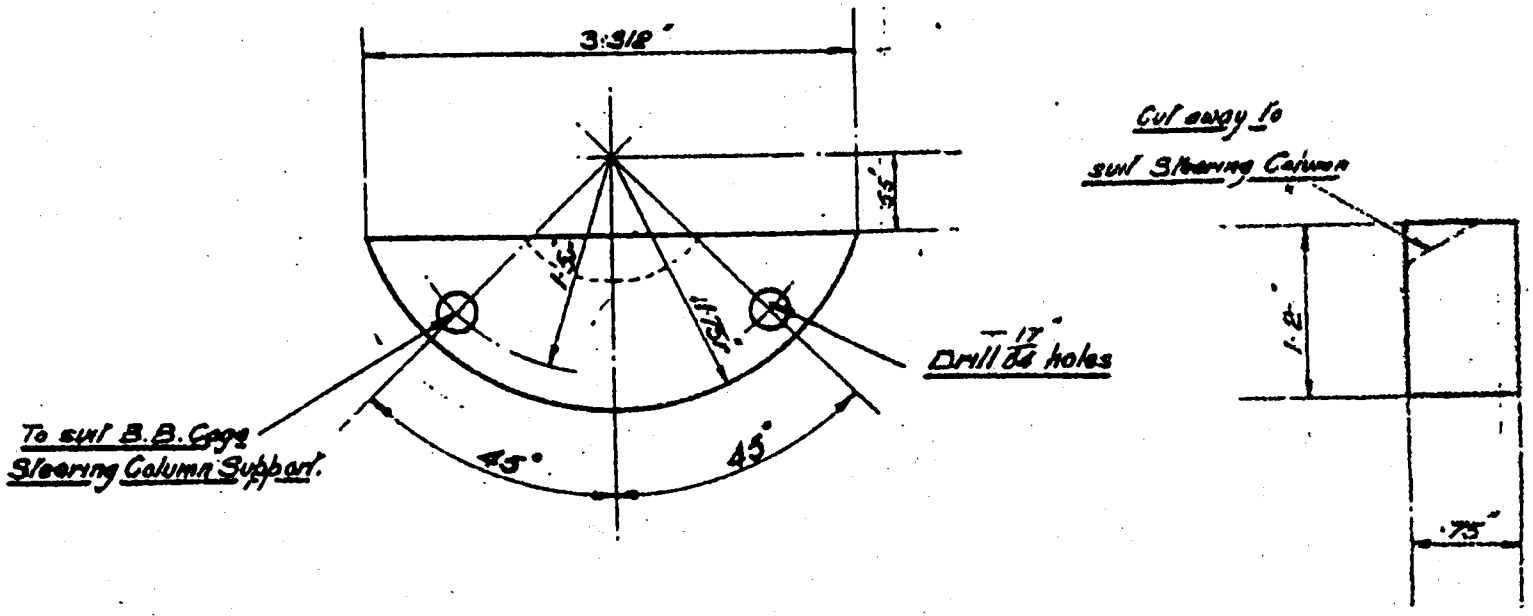

DRAWING No. 690 - S	STEERING COLUMN SUPPORT	DRAWN BY	[illegible]
MATERIAL. WOOD	DISTANCE PIECE	TRACED BY	[illegible]
HEAT TREATMENT:		CHECKED BY	[illegible]
		PASSED BY	[illegible]
		DATE	22-8-17

HS99

M/c Where marked f

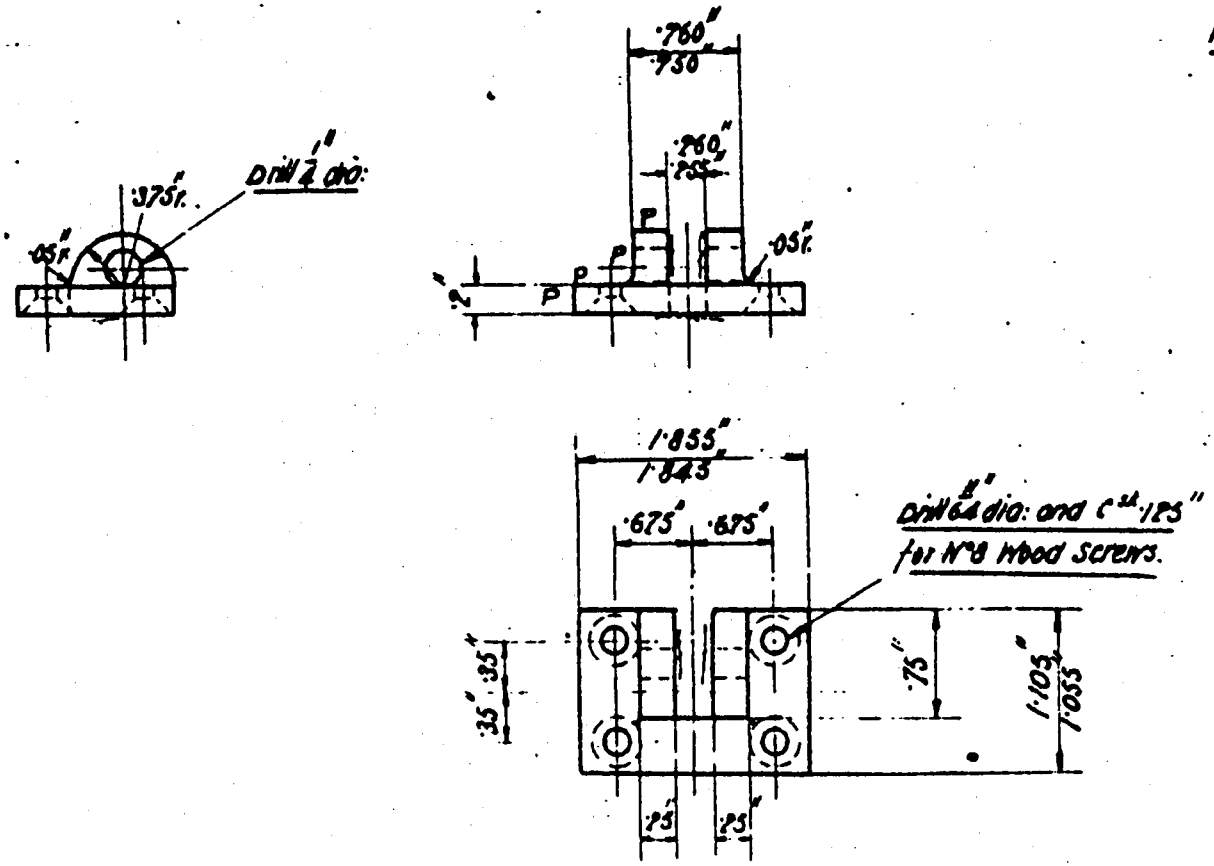

NICKEL PLATED & POLISHED SURFACES P

DRAWING Nº. 659 – S	HOOD BRACKET	DRAWN BY FCB
MATERIAL. C. M.		TRACED BY SH
HEAT TREATMENT.		CHECKED BY
		PASSED BY
		DATE 11 - 12 - 19

H934

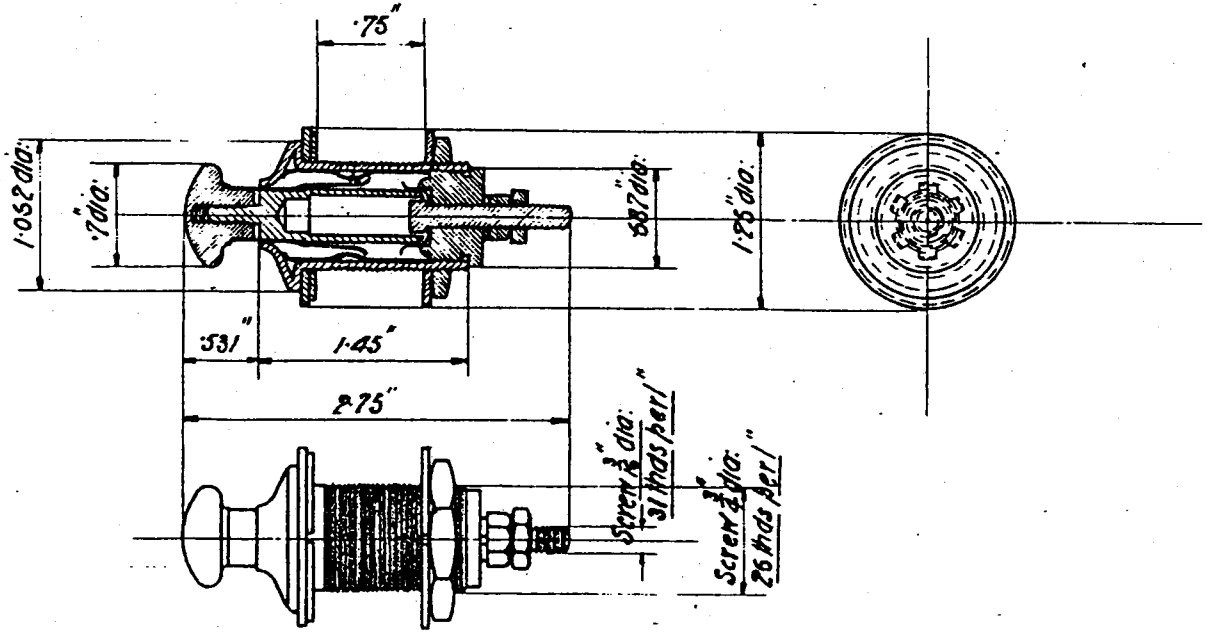

DRAWING No. 731—S

MATERIAL. BRASS

HEAT TREATMENT.

MACNETO SWITCH

DRAWN BY	S.H.
TRACED BY	S.H.
CHECKED BY	[illegible]
PASSED BY	[illegible]
DATE 8 - 10 - 19	

H 950

M/c Where marked

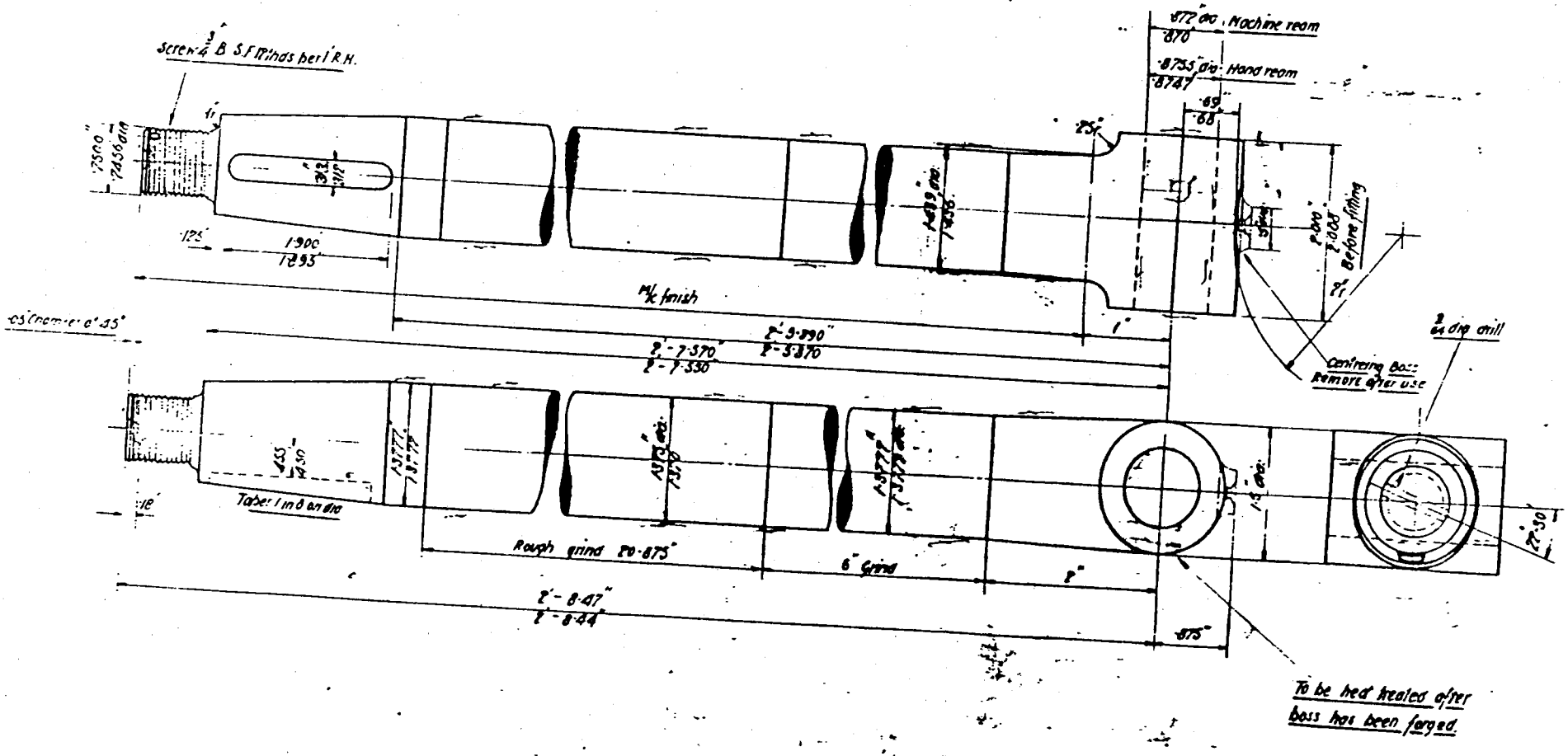

DRAWING No. 24S-4

MATERIAL. 3% N.S.

HEAT TREATMENT. 15

PROPELLER SHAFT

DRAWN BY	
TRACED BY	
CHECKED BY	
PASSED BY	
DATE	

H951

M/C Where marked

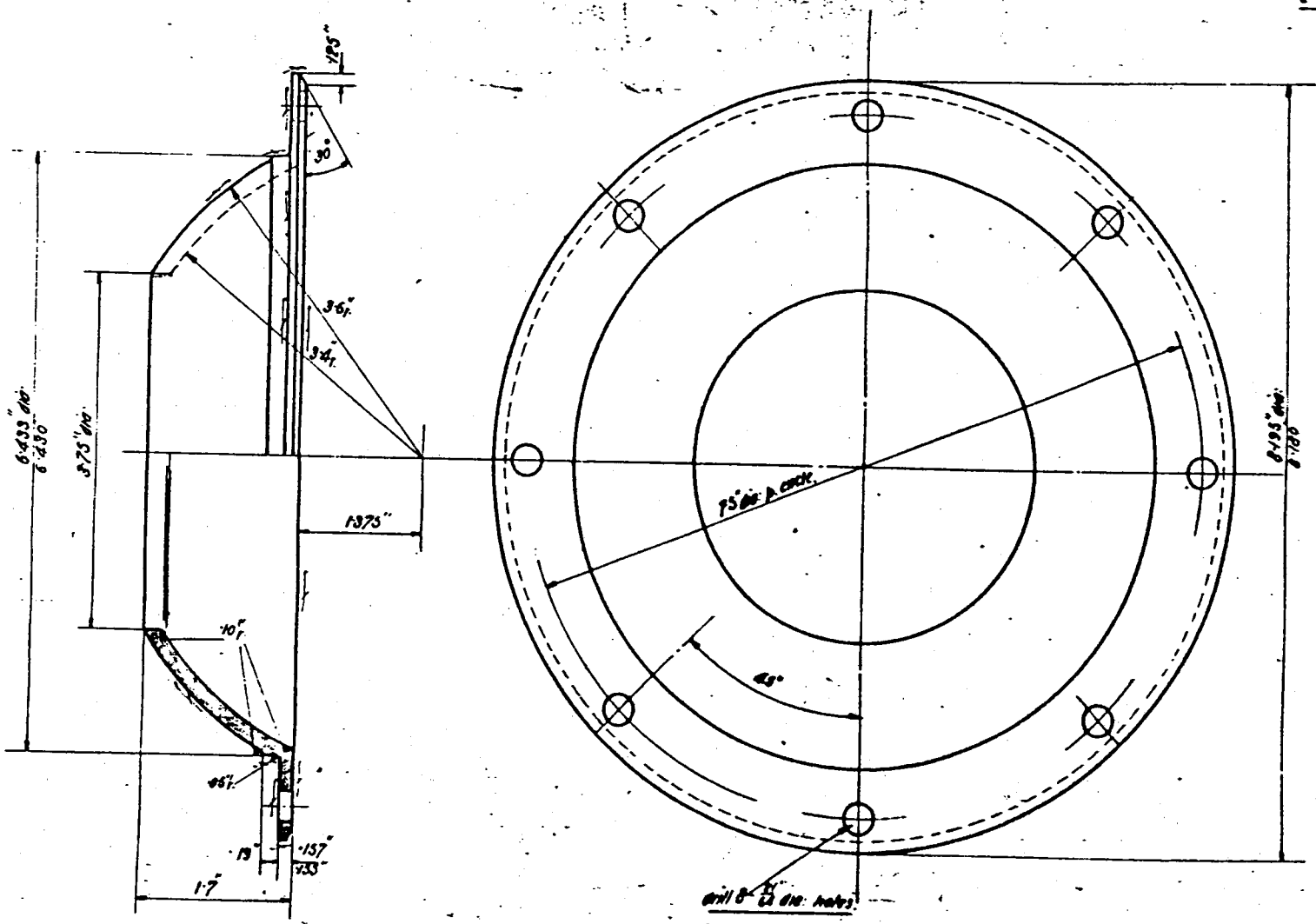

DRAWING No. 249-4	STEERING BOX	DRAWN BY	F.V.
MATERIAL. S.G.M. CASTG.	THRUST RING INNER	TRACED BY	S.H.
HEAT TREATMENT.		CHECKED BY	[illegible]
		PASSED BY	[illegible]
		DATE 10 - 10 - 19.	

H 973

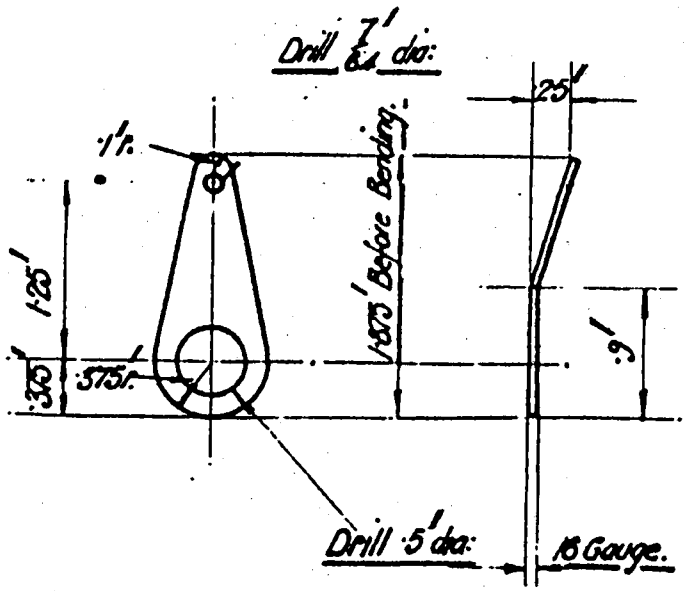

DRAWING No. 700—S	CONTROL SPRING BRACKET.	DRAWN BY
MATERIAL. SPC. S.		TRACED BY
HEAT TREATMENT.		CHECKED BY
		PASSED BY
		DATE 15/10/9.

L3S

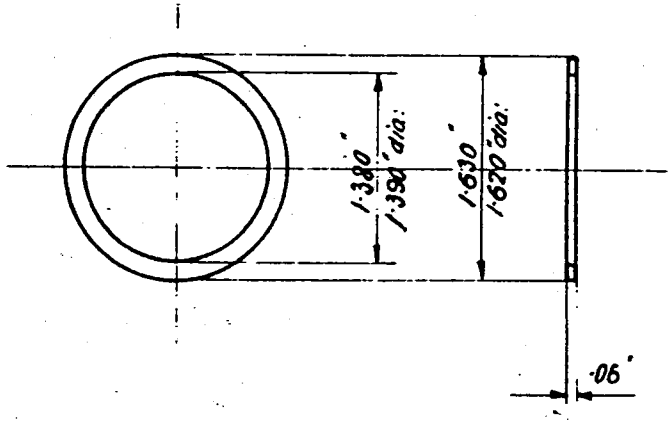

Planish Finish.

Retraced 15.11.18

DRAWN BY	P.H
TRACED BY	H.B
CHECKED BY	
PASSED BY	
DATE 8.6.18	

DRAWING No. 33 — S

MATERIAL. M.S. PRES.

HEAT TREATMENT.

STEERING WORM PACKING WASHER

L39

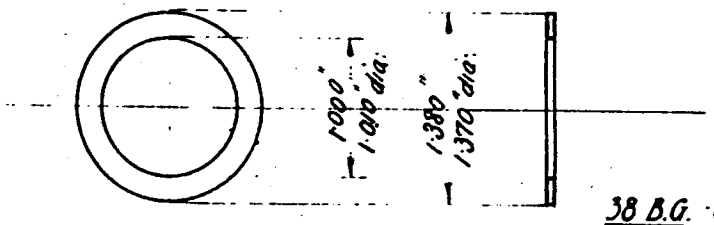

38 B.G.	·0048"	as required.
30 B.G.	·012"	
22 B.G.	·031"	
20 B.G.	·039"	
18 B.G.	·049"	
16 B.G.	·062"	

Planish Finish.

Retraced 15.11.18

DRAWING No. 33 – S	STEERING WORM WHEEL PACKING WASHER	DRAWN BY	P.H.
MATERIAL M. S. PRES.		TRACED BY	H.B.
HEAT TREATMENT		CHECKED BY	
		PASSED BY	
		DATE 8. 6. 18	

L 46

L65

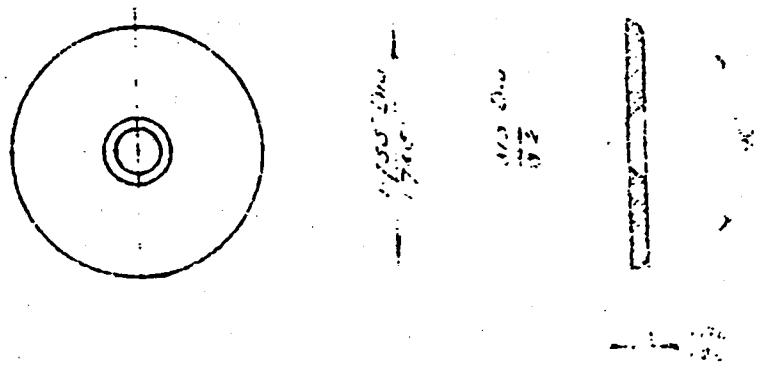

DRAWING No. 327-S

MATERIAL. B.D. S.

HEAT TREATMENT.

BRAKE CAMSHAFT WASHER.

DRAWN BY

TRACED BY

CHECKED BY

PASSED BY

DATE

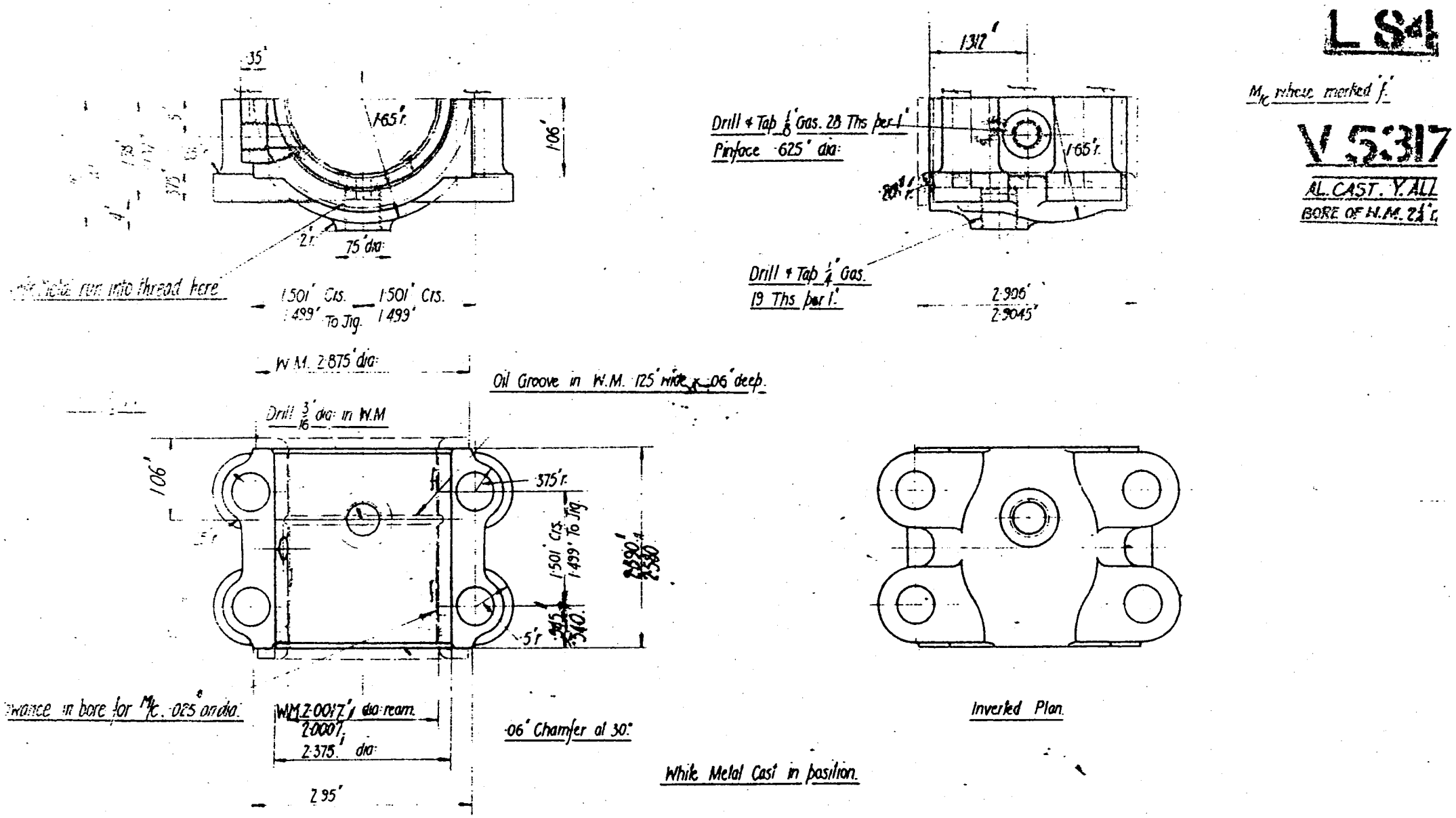

ING No. 104-4	MAIN BEARING CAP	Retraced 27-1-
RIAL. BRASS STAMPING		DRAWN BY
TREATMENT. NONE		TRACED BY
		CHECKED BY
		PASSED BY
		DATE 1-6-

LSS

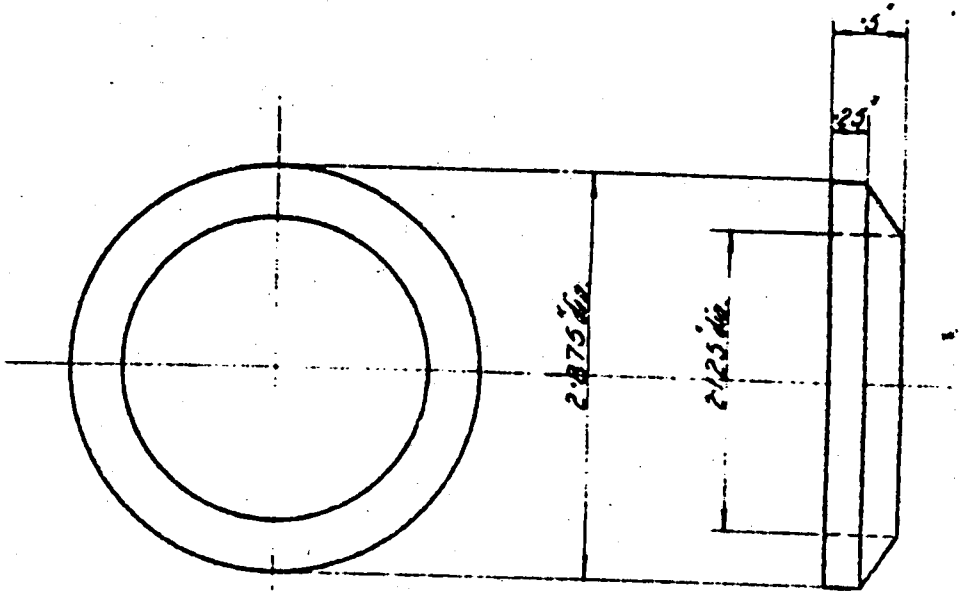

DRAWING Nº. 1629—S	GEARBOX PACKING GLAND BACK	Reduced 25-2-21
MATERIAL. FELT.		DRAWN BY
HEAT TREATMENT.		TRACED BY
		CHECKED BY
		PASSED BY
		DATE 14-11-16

LS9

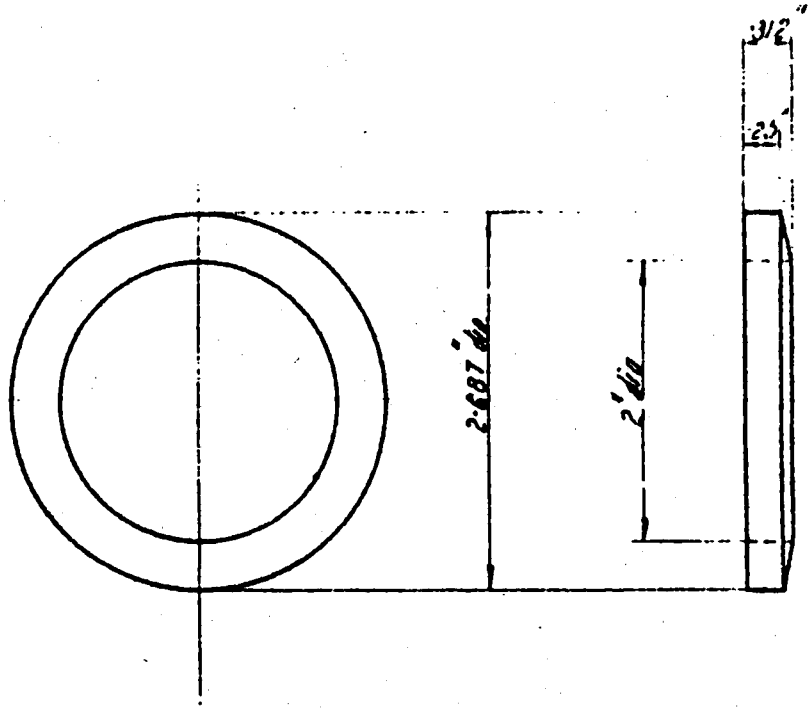

Retraced 25-2-24

DRAWING No. 1629—S	GEARBOX PACKING GLAND FRONT
MATERIAL: FELT.	
HEAT TREATMENT.	

DRAWN BY	
TRACED BY	
CHECKED BY	
PASSED BY	
DATE 14-11-16	

L 90

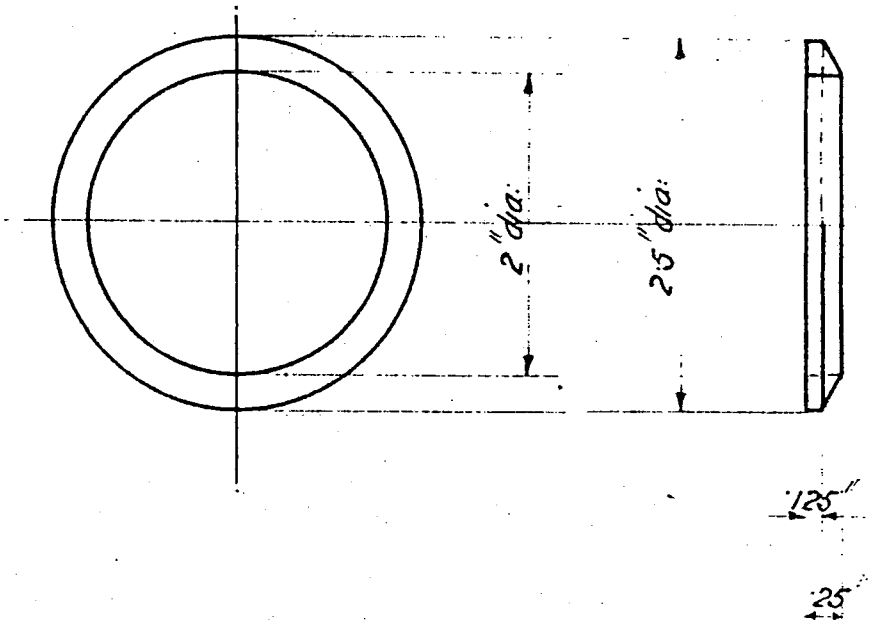

Retraced 2-3-18

DRAWING Nº. 114-8	BACK AXLE PACKING GLAND	DRAWN BY	J.W.C.
MATERIAL. FELT		TRACED BY	E.K.
HEAT TREATMENT. NONE		CHECKED BY	
		PASSED BY	A.K.
		DATE 14-11-16	

L96

M/c where marked "f"

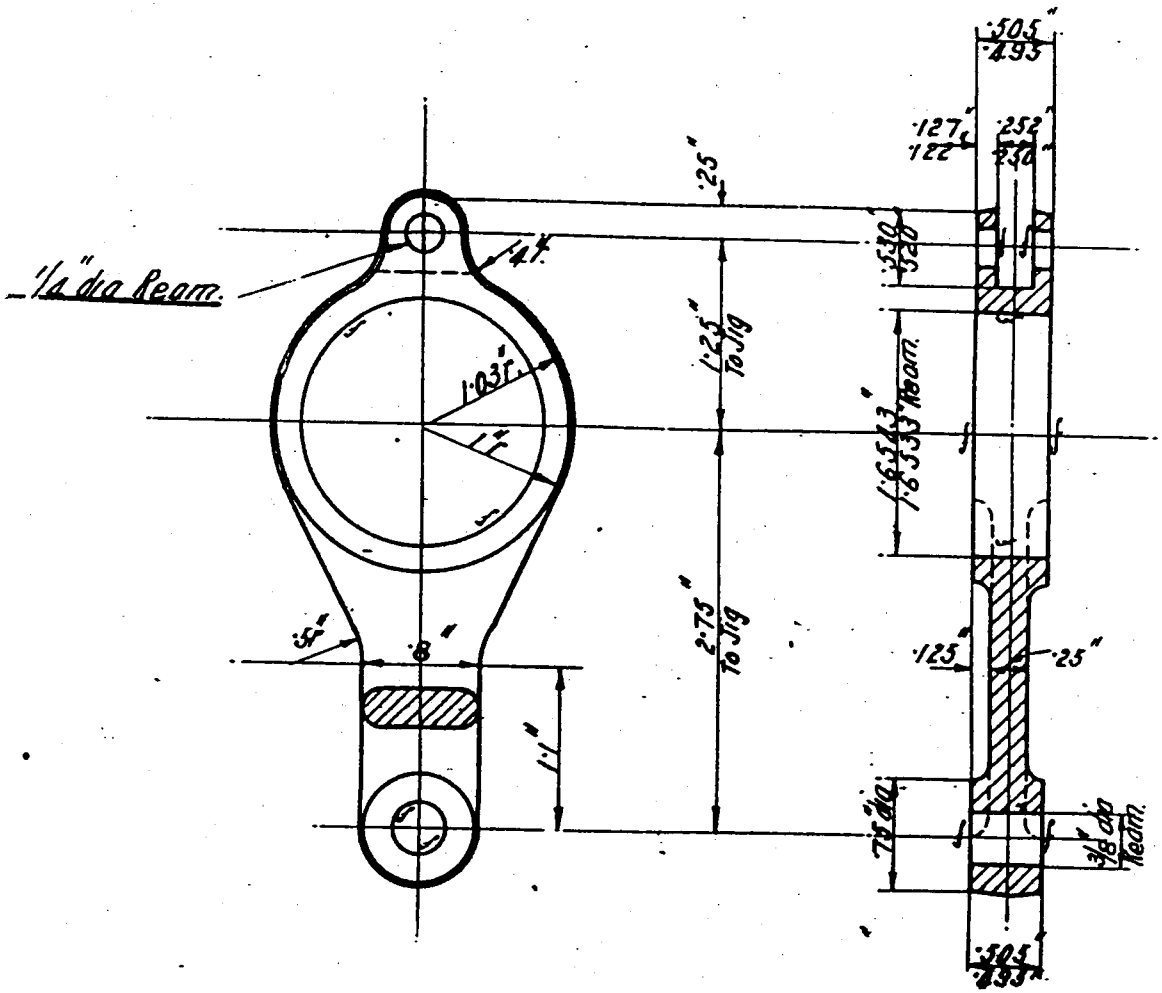

Retraced 31-8-21

DRAWING No. 2105-S	
MATERIAL. H.T.S. 40 C. STG.	
HEAT TREATMENT. A2	

ECCENTRIC STRAP

DRAWN BY	H.P.H
TRACED BY	[illegible]
CHECKED BY	[illegible]
PASSED BY	[illegible]

L 132

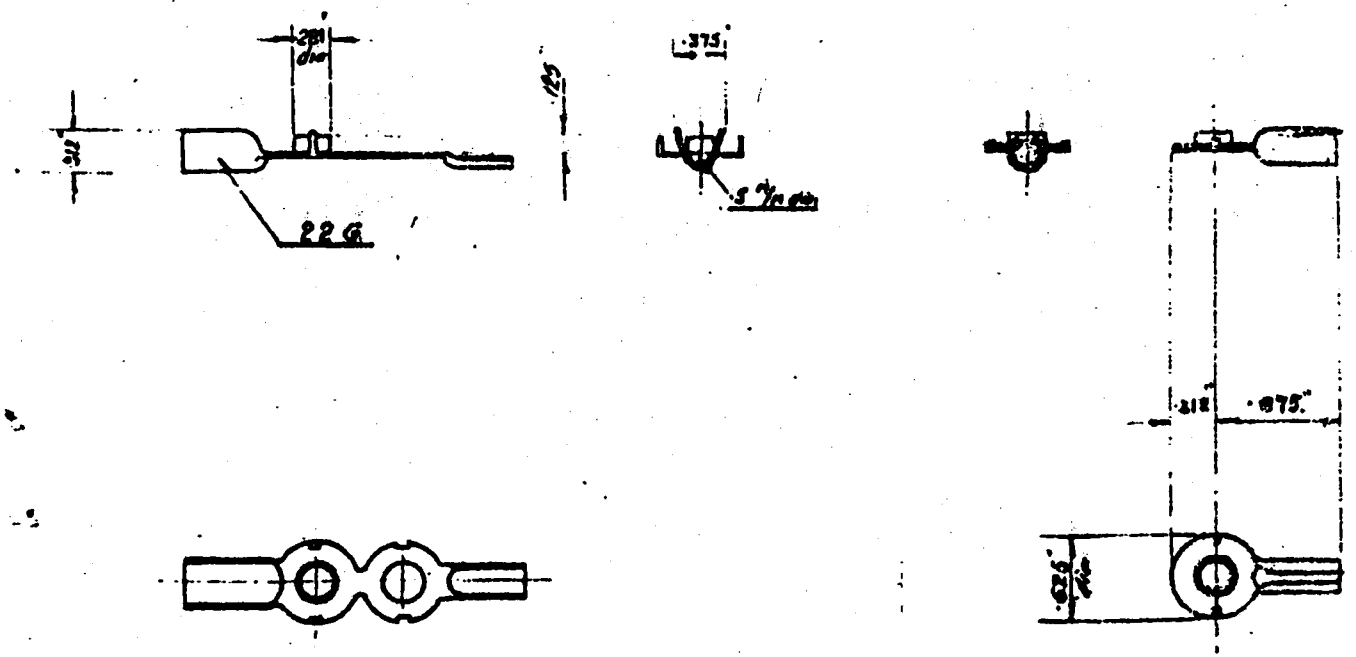

[illegible] 2526.		DRAWN BY
[illegible] 2509-8	TERMINAL FOR LOW TENSION WIRE	TRACED BY
[illegible]		CHECKED BY
		PASSED BY

L154

M/c all over

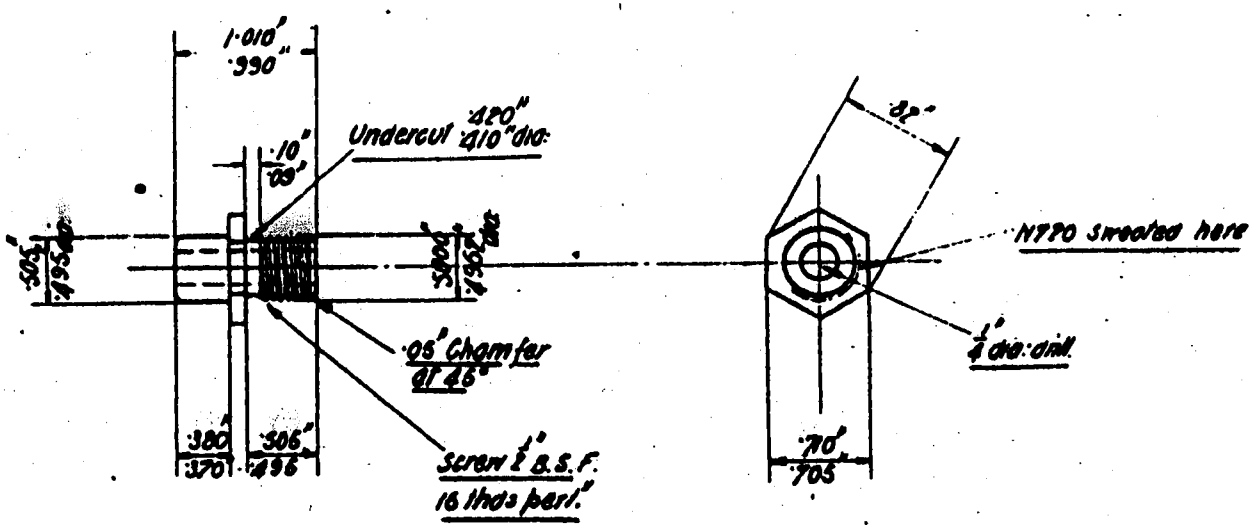

Retraced 18-6-79

DRAWING No. 1129-S	
MATERIAL. H.D.B.	
HEAT TREATMENT.	

OIL TELL TALE GUIDE

DRAWN BY	F.C.
TRACED BY	J.N
CHECKED BY	
PASSED BY	
DATE 15-11-16.	

L 212

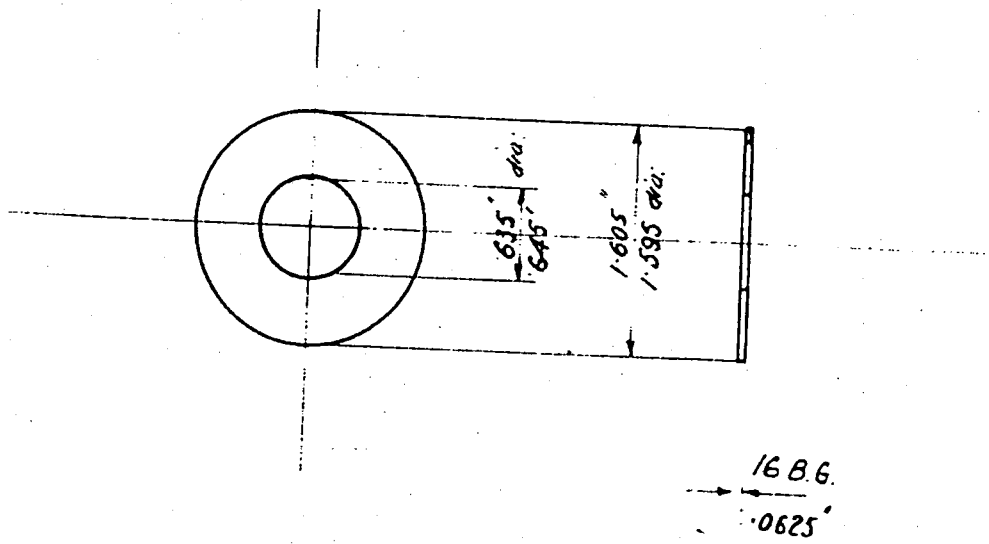

Planish Finish.

DRAWING No. 152 – S	PACKING WASHER	Retraced 12.6.16
MATERIAL. M. S. PRESS.		DRAWN BY C V
HEAT TREATMENT.		TRACED BY HB
		CHECKED BY
		PASSED BY
		DATE 13 2 16

L 213
L 214
D 344
D 345
D 346

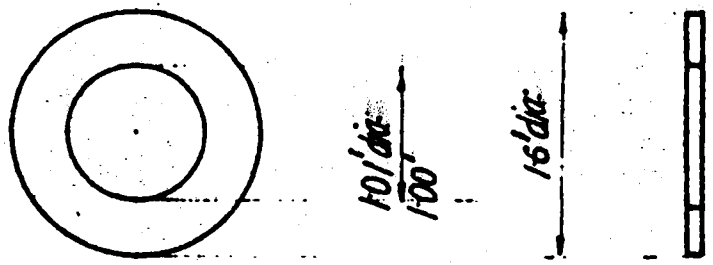

Part No.	Thickness
	100 = .125"
	120 = .099"
	140 = .078"
	160 = .062"
	220 = .031"

DRAWING No. 1398-S
MATERIAL MS PRESS
HEAT TREATMENT

BACKING WASHER

DRAWN BY	
TRACED BY	
CHECKED BY	
PASSED BY	
DATE	24-11-64

L241

M/c. all over.

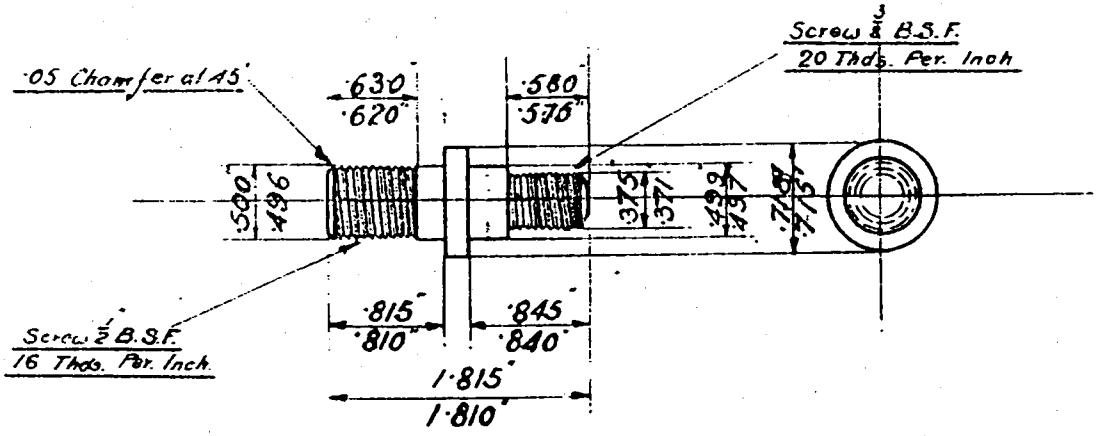

Retraced 3·2·19

DRAWING No. SI – S	COLLAR STUD.	DRAWN BY	[illegible]
MATERIAL. B.D.S.		TRACED BY	R.L.F.
HEAT TREATMENT.		CHECKED BY	
		PASSED BY	[illegible]
		DATE 15·11·16.	

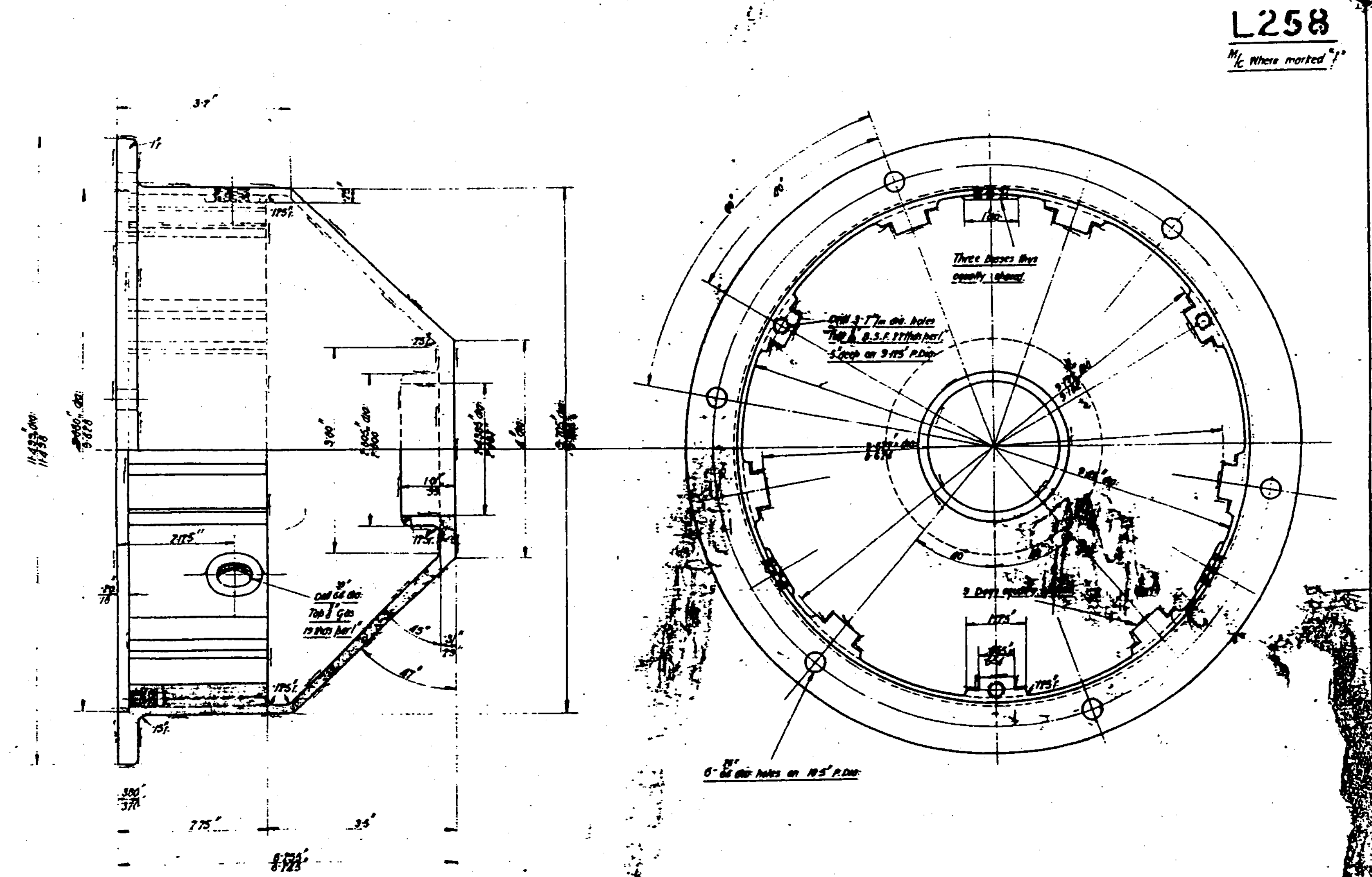

DRAWING No.	
MATERIAL.	
HEAT TREATMENT.	

MEMBER

L352
L350

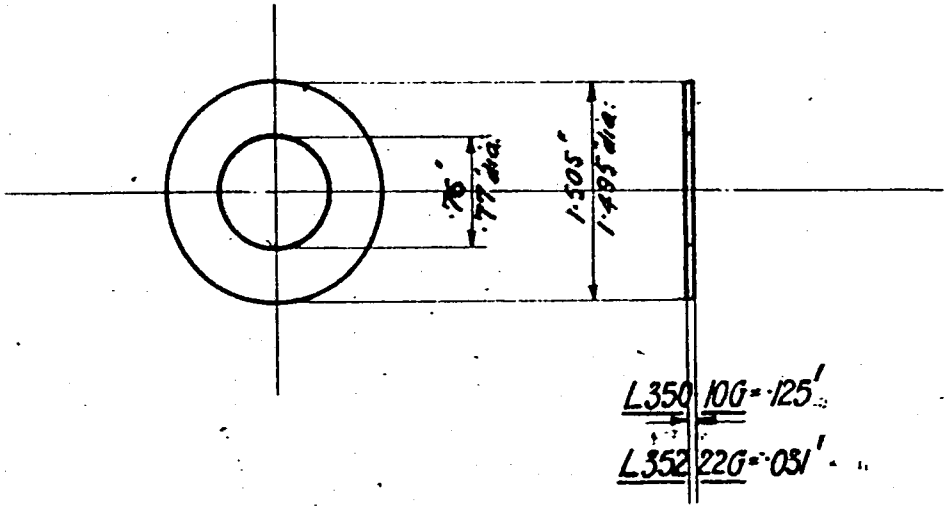

Planish finish.

Retraced 3.10.18.

DRAWING No. 151 — S	PACKING WASHER FOR SPRING HORN
MATERIAL M.S. PRESS	
HEAT TREATMENT. NONE	

DRAWN BY	H.P.N
TRACED BY	H.B
CHECKED BY	
PASSED BY	
DATE 2.5.17.	

L353
L351

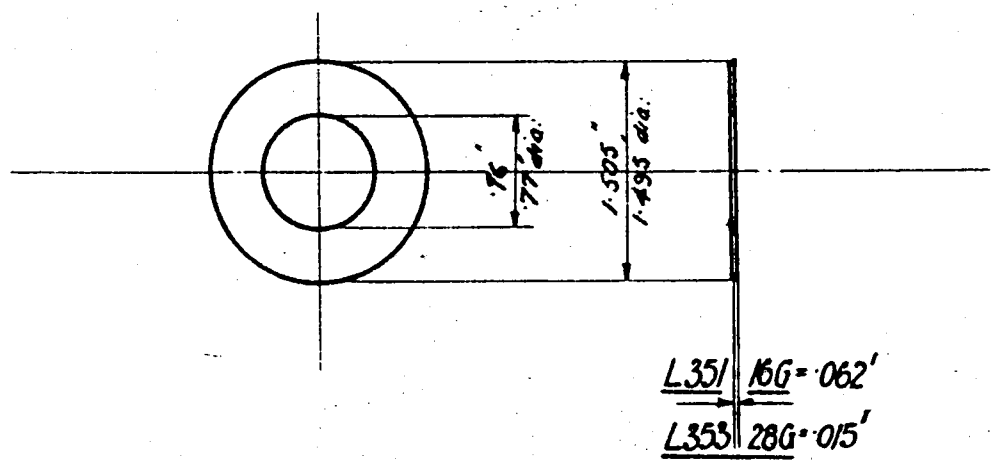

Planish Finish.

Retraced 3.10.18

DRAWING No. 151 — S	PACKING WASHER FOR SPRING HORN	DRAWN BY	H.P.H.
MATERIAL M.S. PRESS.		TRACED BY	H.B.
HEAT TREATMENT. NONE		CHECKED BY	
		PASSED BY	[illegible]
		DATE 2.5.17	

L365

M/c all over.

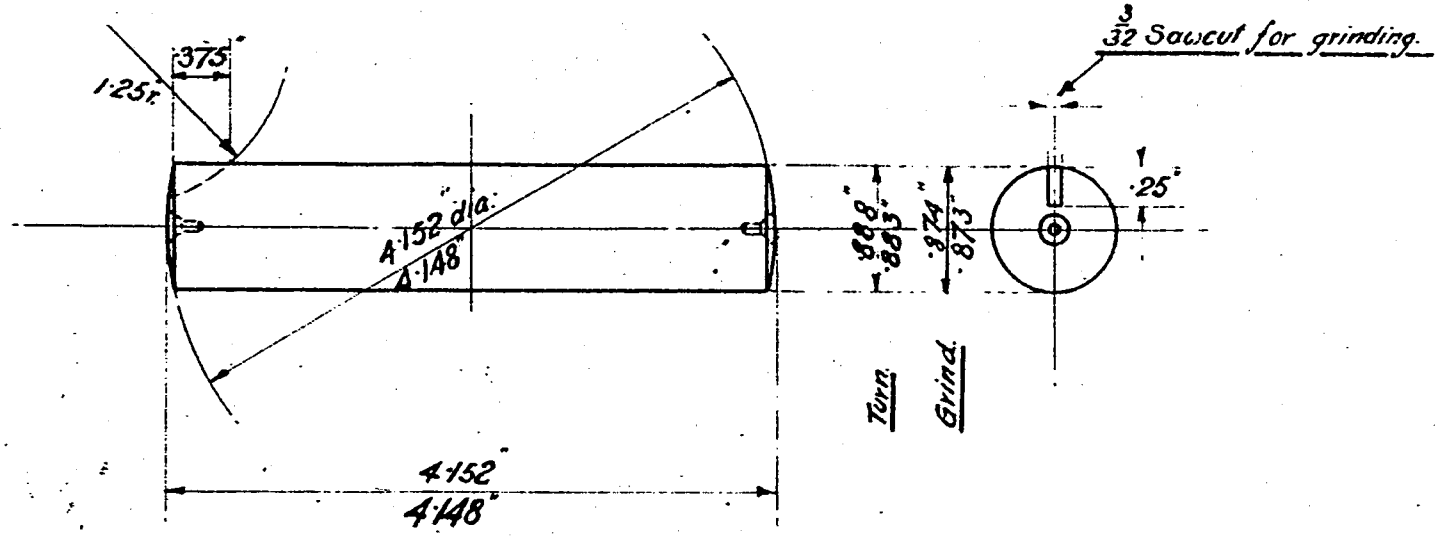

HARDEN & GRIND.

Retraced 31·1·19

DRAWING No. SQ-S	UNIVERSAL STAR JOINT PIN	DRAWN BY	F.C.
MATERIAL: [illegible] C.H.M.S.		TRACED BY	R.L.J.
HEAT TREATMENT: D(W)		CHECKED BY	
		PASSED BY	[illegible]
		DATE	6·6·17

L 371

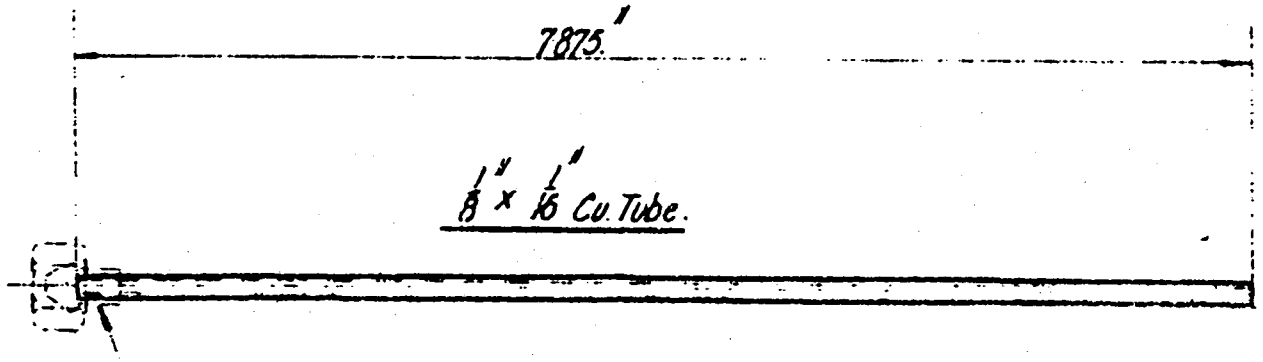

Braze SL 64/A

Note:- Bend to suit Camshaft Bearing & Crankcase

DRAWING No. 2640—S	CAMSHAFT BACK BEARING FEED PIPE	DRAWN BY
MATERIAL. CU. TUBE		TRACED BY
HEAT TREATMENT. NONE		CHECKED BY
		PASSED BY

L387

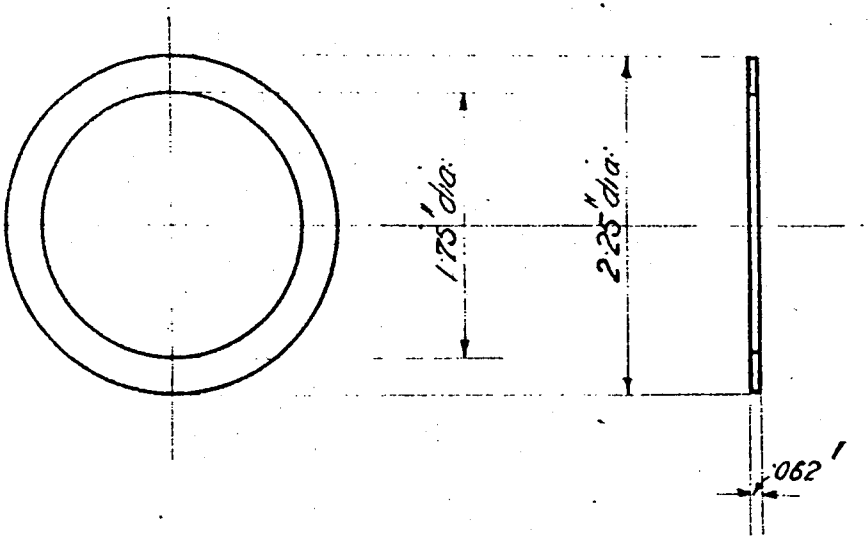

Retraced 9-9-18

DRAWING No. 114-S	WASHER FOR Y10	DRAWN BY	R.S.C.
MATERIAL. LEATHER		TRACED BY	[illegible]
HEAT TREATMENT NONE		CHECKED BY	
		PASSED BY	[illegible]
		DATE	[illegible]

L.400

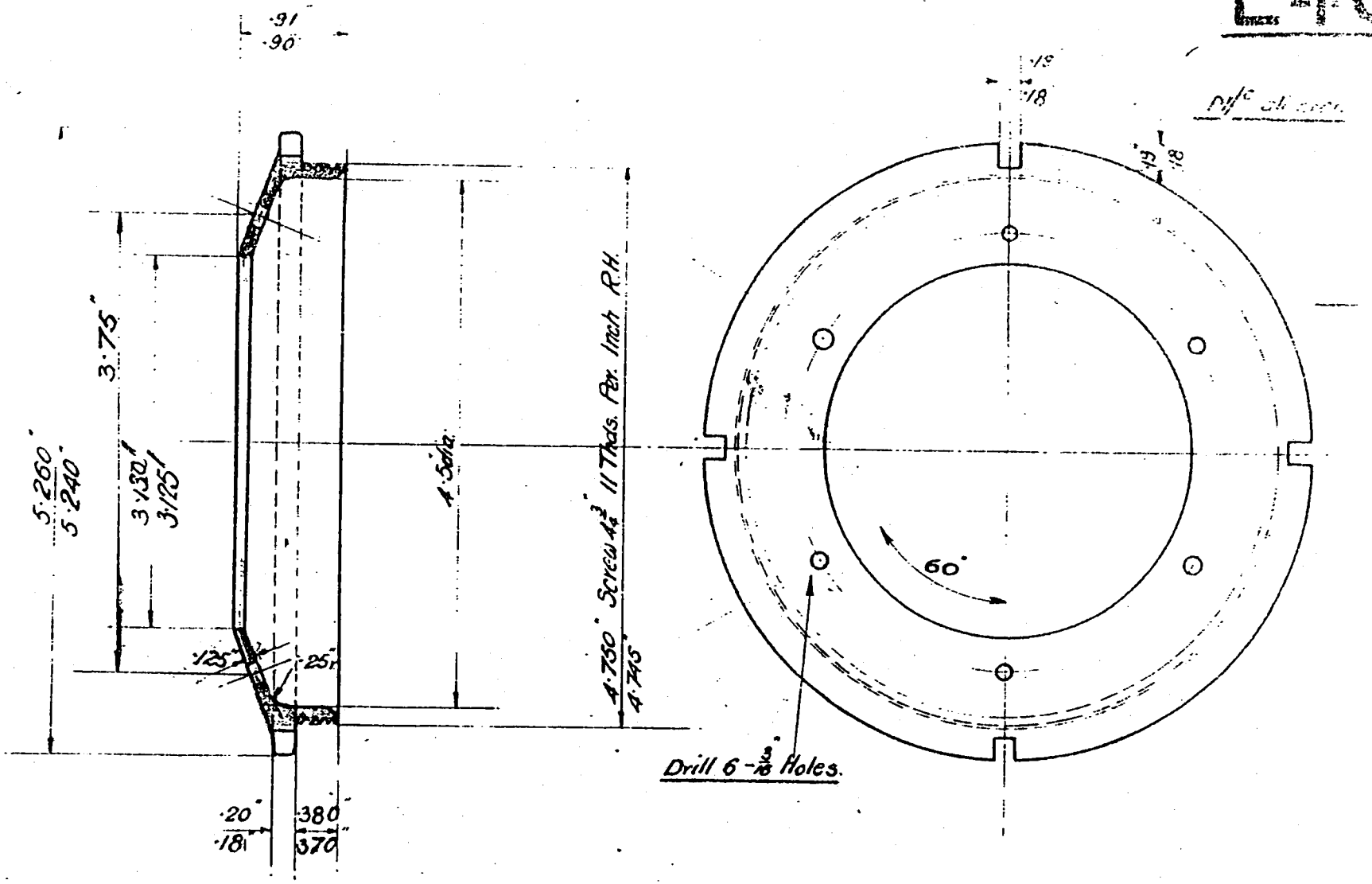

Retraced 3·2·13

DRAWING Nº. S2 –9

MATERIAL C.I

HEAT TREATMENT

UNIVERSAL JOINT COVER

DRAWN BY	R.B.
TRACED BY	R.L.T.
CHECKED BY	
PASSED BY	

L404

M/c All Over

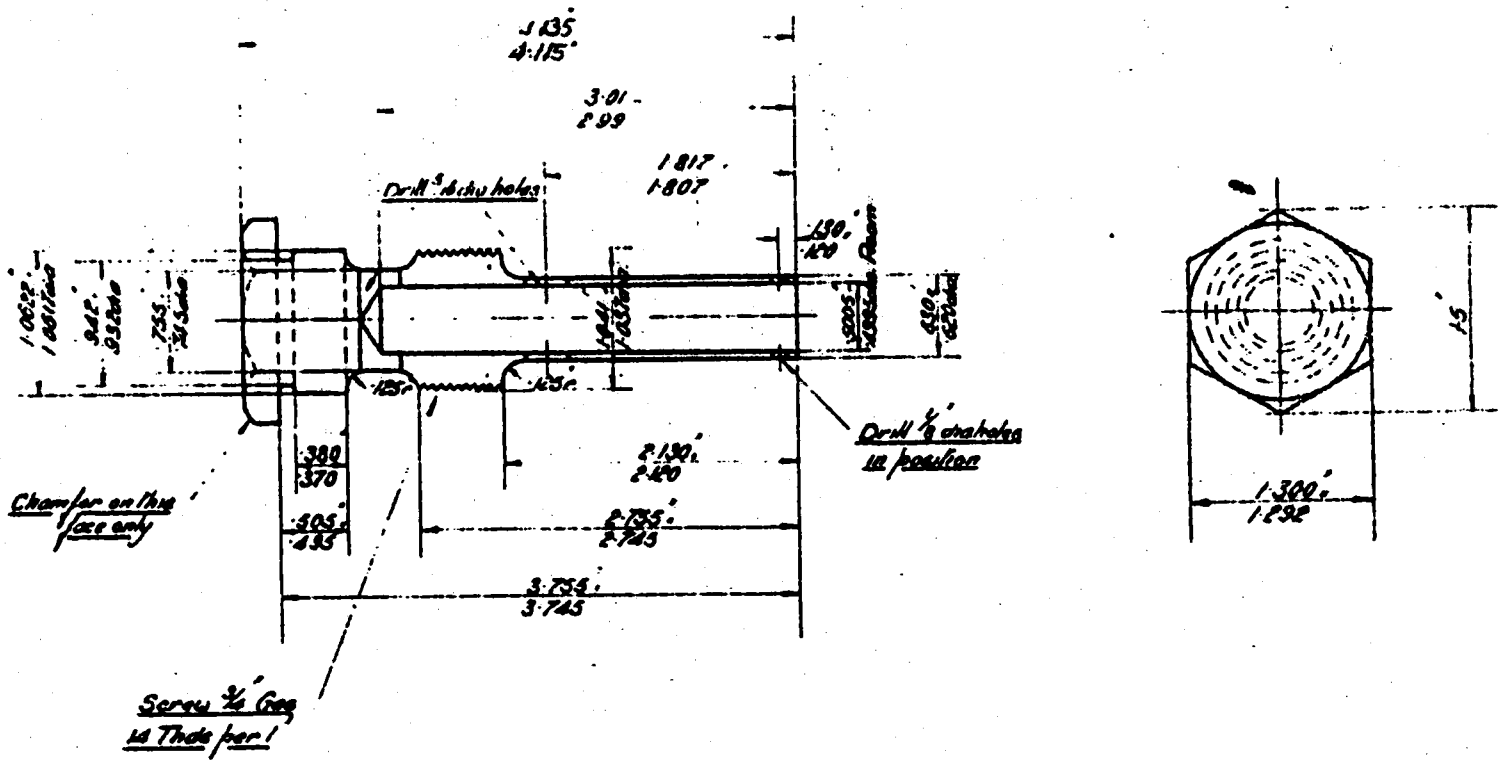

Redrawn 12-1-21

DRAWING No. 1529-S	OIL REGULATOR	DRAWN BY	KC
MATERIAL. B.D.S. 15%C		TRACED BY	[illegible]
HEAT TREATMENT.		CHECKED BY	[illegible]
		PASSED BY.	[illegible]
		DATE 27-7-17	

L 406

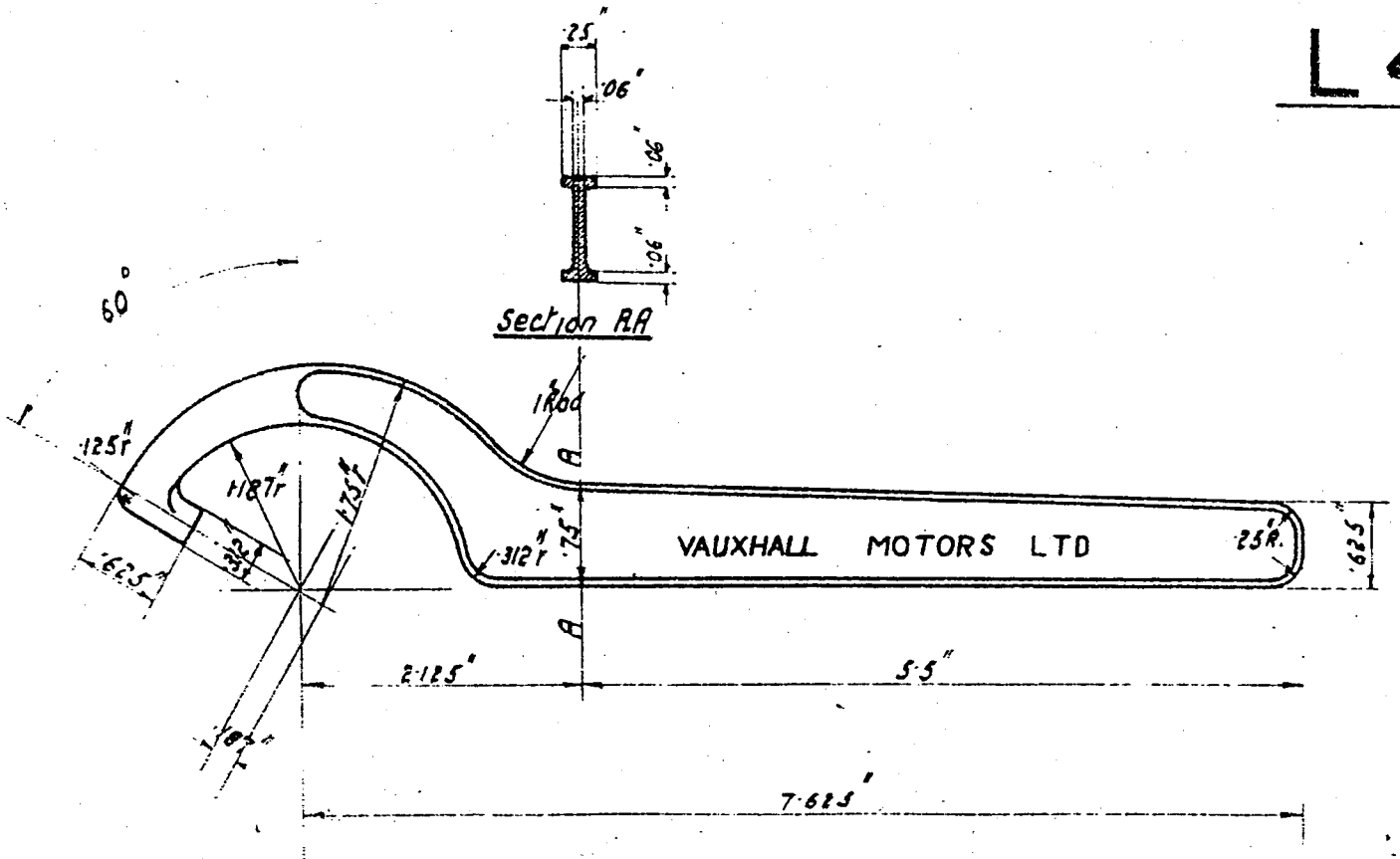

Traced 15-11-22

DRAWING No 2562-S	SPANNER FOR CLUTCH LOCKING RING	DRAWN BY R.S.C.
MATERIAL M.S. 20 C. 5 TPG.		TRACED BY
HEAT TREATMENT A.I.		CHECKED BY
		PASSED BY
		DATE 11-7-17

L417

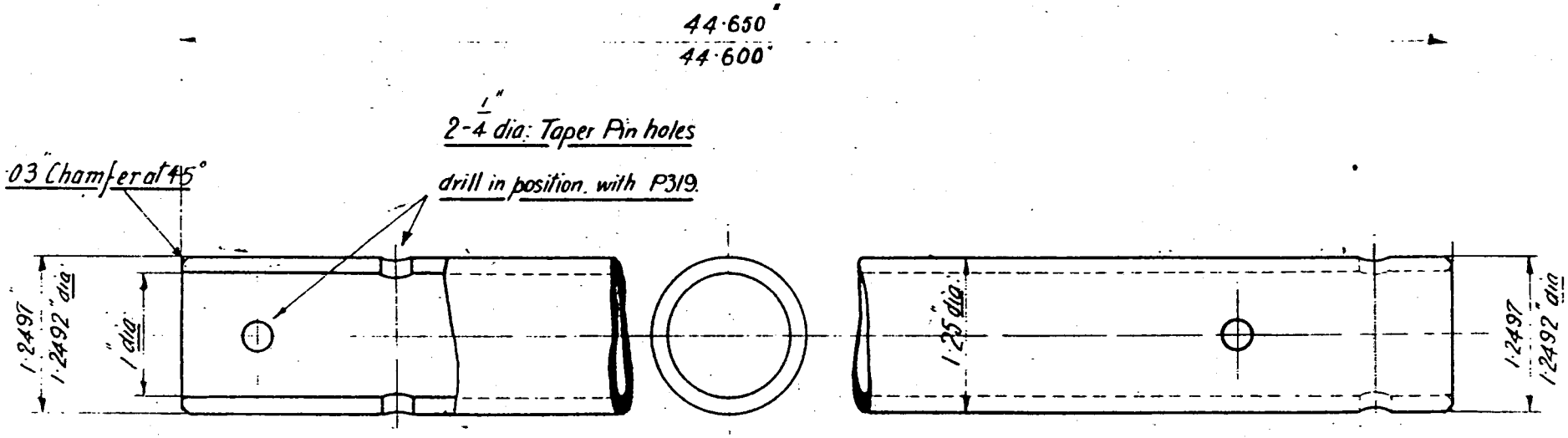

DRAWING No. 36 — S	TIE BAR	Retraced 20.11.18
MATERIAL W. S. T. (A)		DRAWN BY P.N
HEAT TREATMENT M2		TRACED BY M.B
		CHECKED BY
		PASSED BY
		DATE 14.4.15.

L 41S

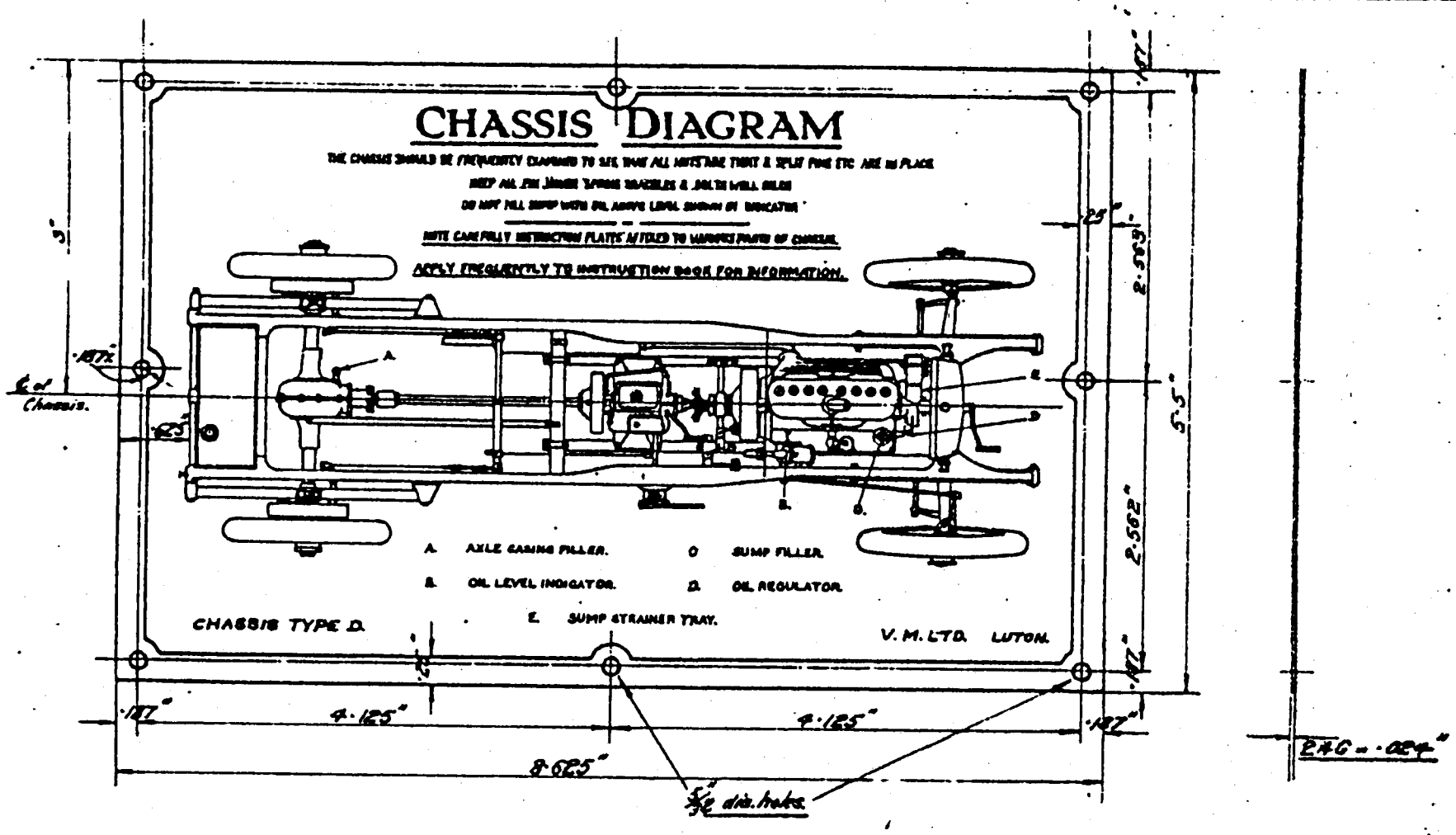

DRAWING No. 1443-S	CHASSIS DIAGRAM INSTRUCTION PLATE	DRAWN BY
MATERIAL. Y.B. PRESS.		TRACED BY
HEAT TREATMENT.		CHECKED BY
		PASSED BY
		DATE 18-6-51

L-42S

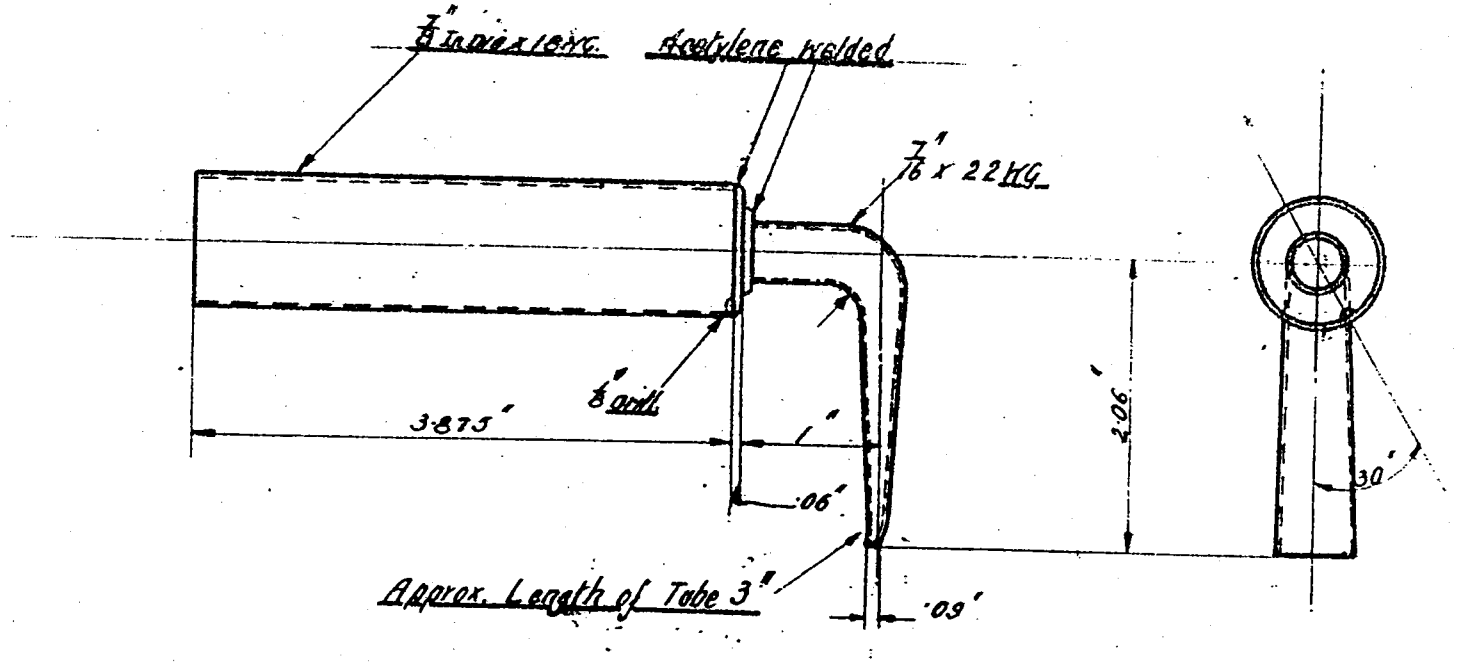

Redrawn 27-7-20

DRAWING No. 1233—S	
MATERIAL. W. S. T.	TIMING CHAIN OILER
HEAT TREATMENT.	

DRAWN BY	F.C.
TRACED BY	R.H.L.
CHECKED BY	A.H.F.
PASSED BY	A.H.
DATE	11-10-17

L 429

M/c where marked 'J'

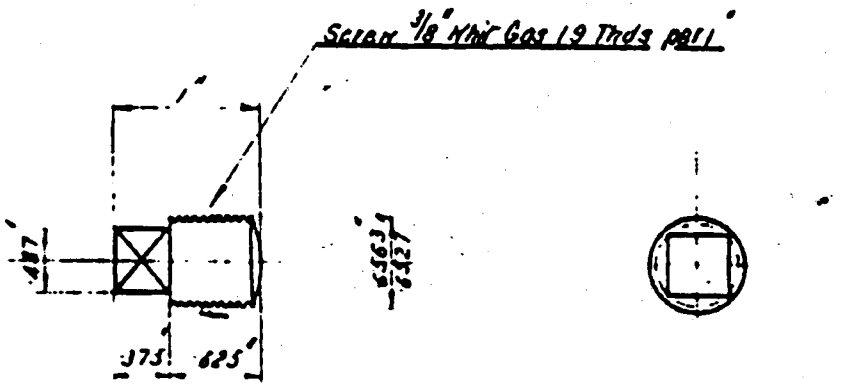

652-S

CHMS. ISC.

AENT NONE

3/8" GAS PLUG

Released 2-5-22

DRAWN BY	R.H
TRACED BY	
CHECKED BY	
PASSED BY	
DATE	20-11-17

L557

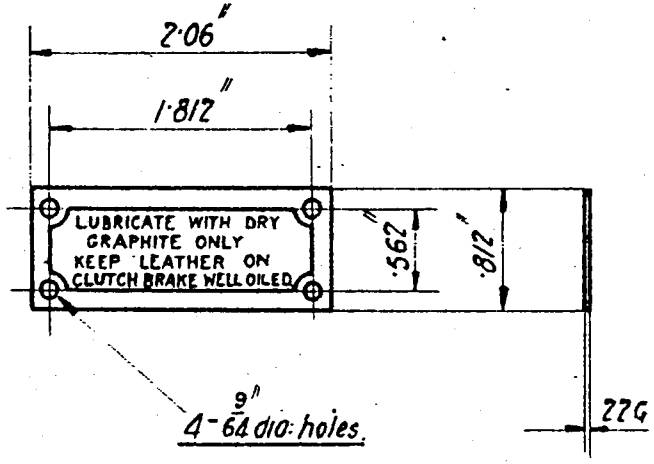

Retraced 15-5-22

DRAWING No. 93-S	
MATERIAL Y.B. PRESS	
HEAT TREATMENT. NONE.	

CLUTCH INSTRUCTION PLATE

DRAWN BY	S.H.
TRACED BY	S.H.
CHECKED BY	A.V.
PASSED BY	S.G.
DATE 3-3-18	

LS40

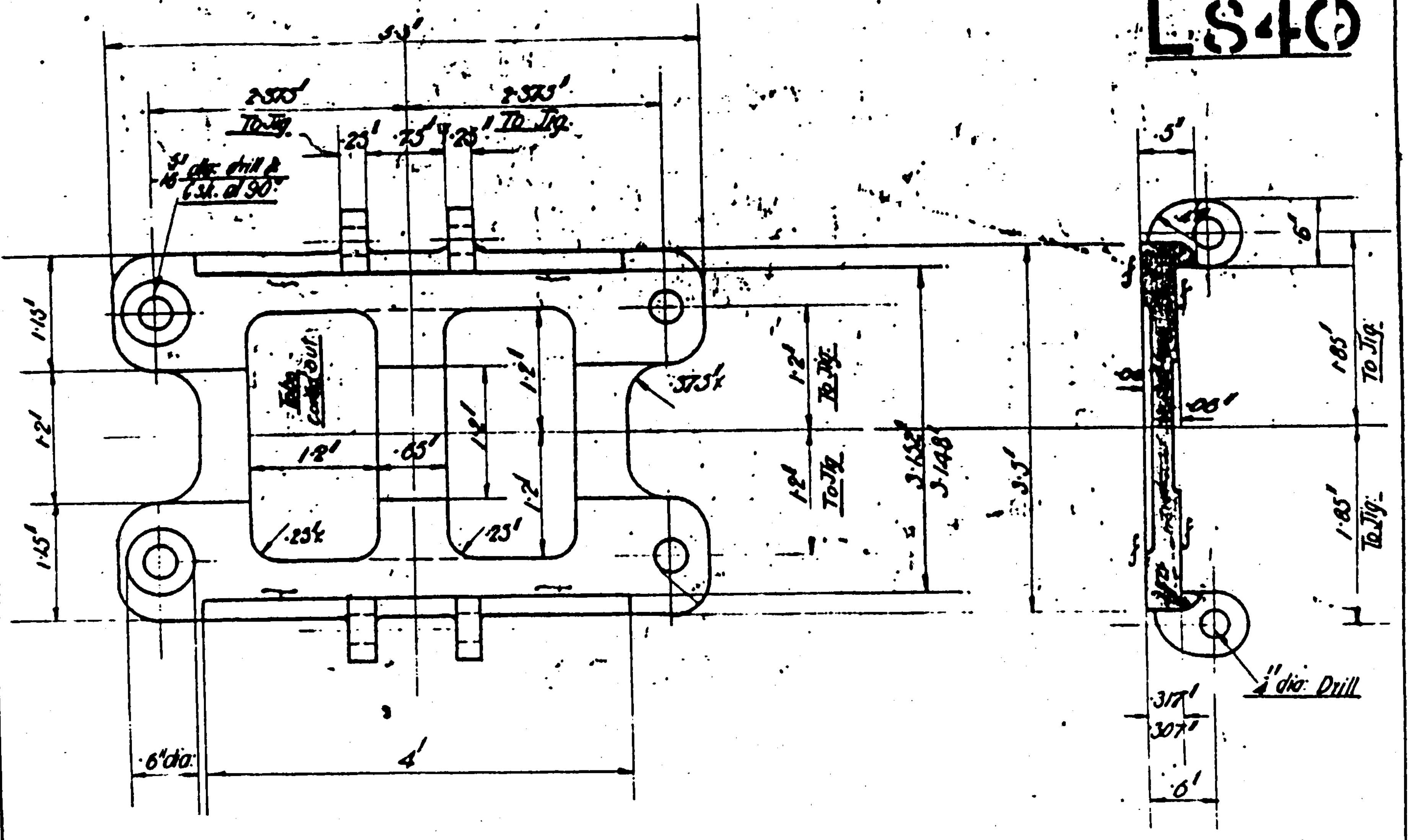

Retraced 23-1-20

DRAWING No. 923-S	MAGNETO TABLE	DRAWN BY H.W
MATERIAL AL. CAST.		TRACED BY
HEAT TREATMENT.		CHECKED BY
		PASSED BY
		DATE 5-10-15

LS46

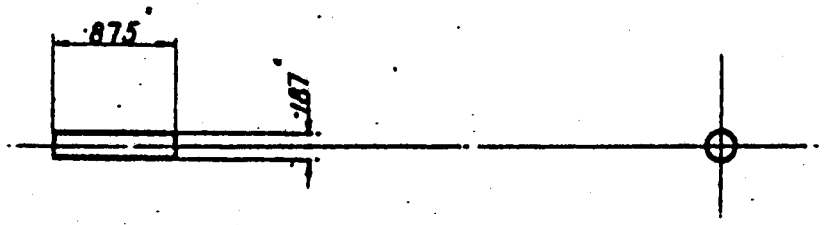

Retraced 7-3-21

DRAWN BY	R.L.F.
TRACED BY	R.K.L.
CHECKED BY	[illegible]
PASSED BY	[illegible]
DATE	11-4-18

DRAWING No. 1585-S

PIN FOR BONNET FASTENER HANDLE

L S47

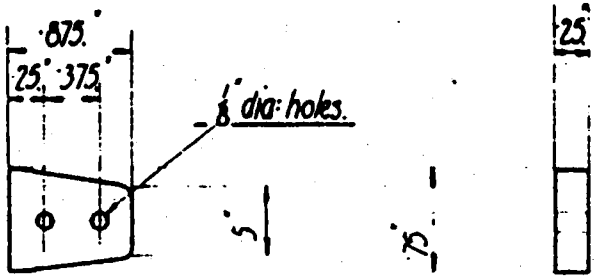

Retraced 20-2-23

DRAWING No. 1069—S	LEATHER FOR FOOTBRAKE OPERATING LEVER	DRAWN BY	R.L.J.
MATERIAL. LEATHER		TRACED BY	
HEAT TREATMENT. NONE.		CHECKED BY	
		PASSED BY	

LS49

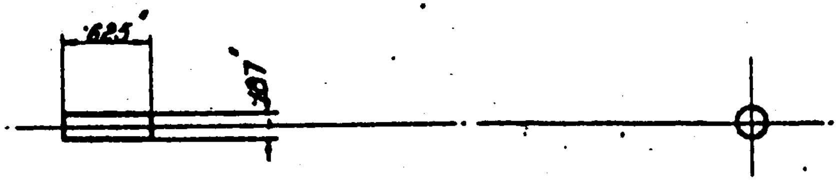

DRAWING No. 1665–S

MATERIAL

HEAT TREATMENT.

PIN FOR CONNECTING LINK

DRAWN BY	R.E.P.
TRACED BY	R.H.
CHECKED BY	
PASSED BY	
DATE 18-1-18	

LS50

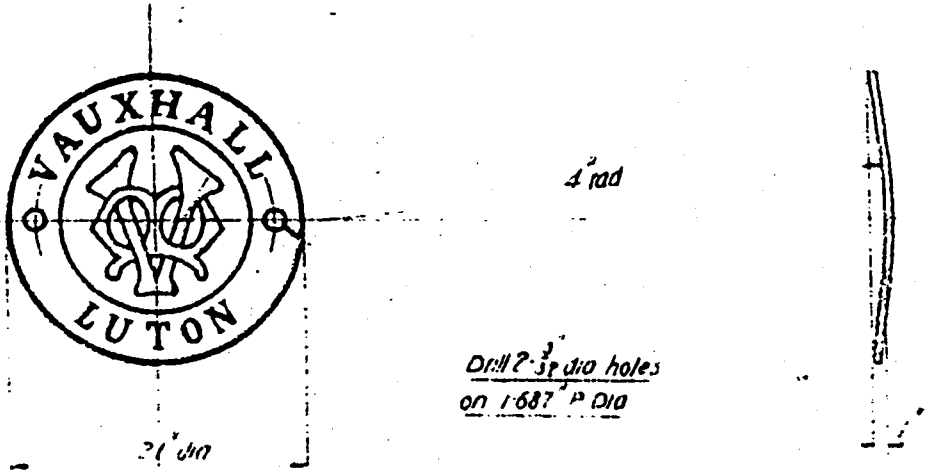
VAUXHALL
LUTON
4" rad
Drill 2-$\frac{3}{32}$" dia holes
on 1.687" P Dia
21" dia

LSS6

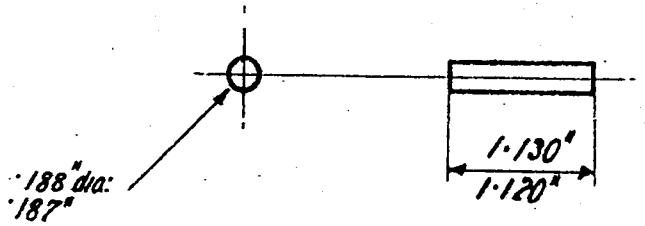

DRAWING No. 74-S

MATERIAL B.F.S.

HEAT TREATMENT.

PIN FOR SOCKET FOOTBRAKE

DRAWN BY	S.H.H
TRACED BY	S.H.H
CHECKED BY	
PASSED BY	
DATE 27-2-19	

L S92

M/c where marked 1"

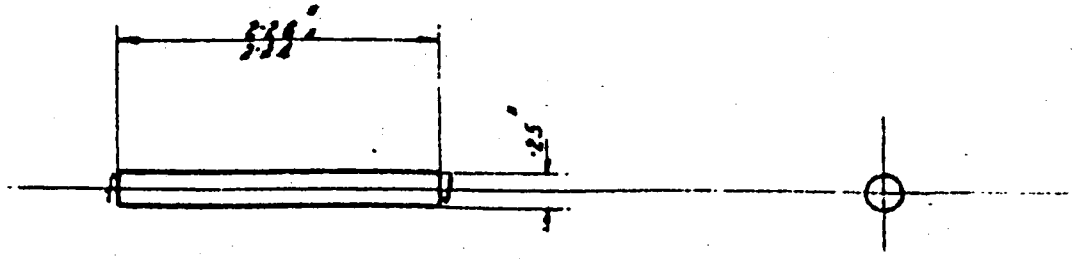

DRAWING No. 1937-S	PIN FOR PROPELLER SHAFT	Retraced 2-5-22
MATERIAL. B.O.C.H.M.S. 15C		DRAWN BY [illegible]
HEAT TREATMENT. None		TRACED BY [illegible]
		CHECKED BY [illegible]
		PASSED BY [illegible]
		DATE 25-5-18

L S94

M/c where marked 'f'.

V 531S

DURALUMIN.

BORE OF W.M. 2 1/4" DIA.

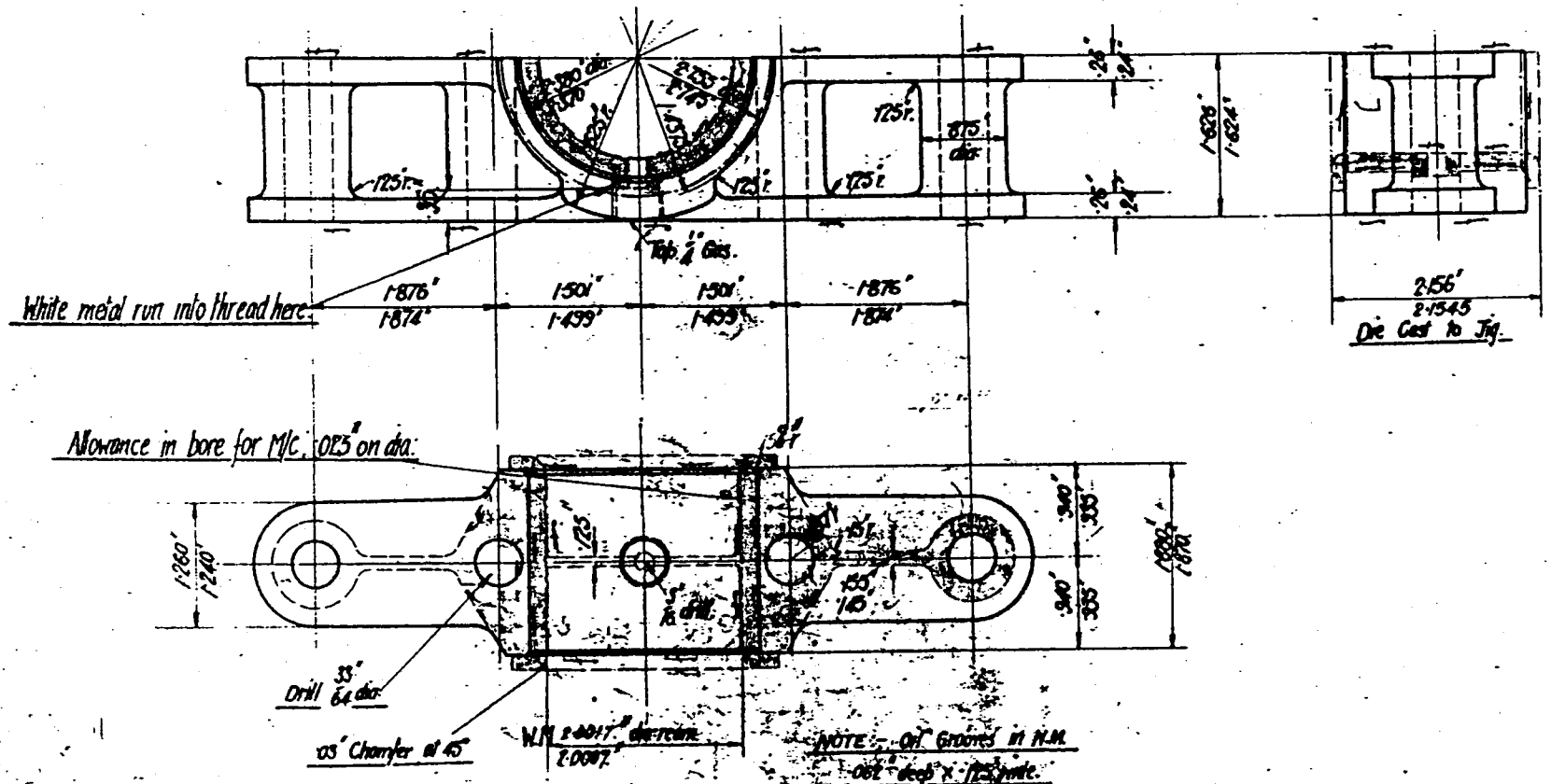

Reduced 29-11-19.

DRAWING No. 363-4	
MATERIAL BRASS STAMPING	
HEAT TREATMENT NONE	

[illegible] (CENTRE)

DRAWN BY	F.C.
TRACED BY	
CHECKED BY	
PASSED BY	
DATE 29-6-19.	

L959

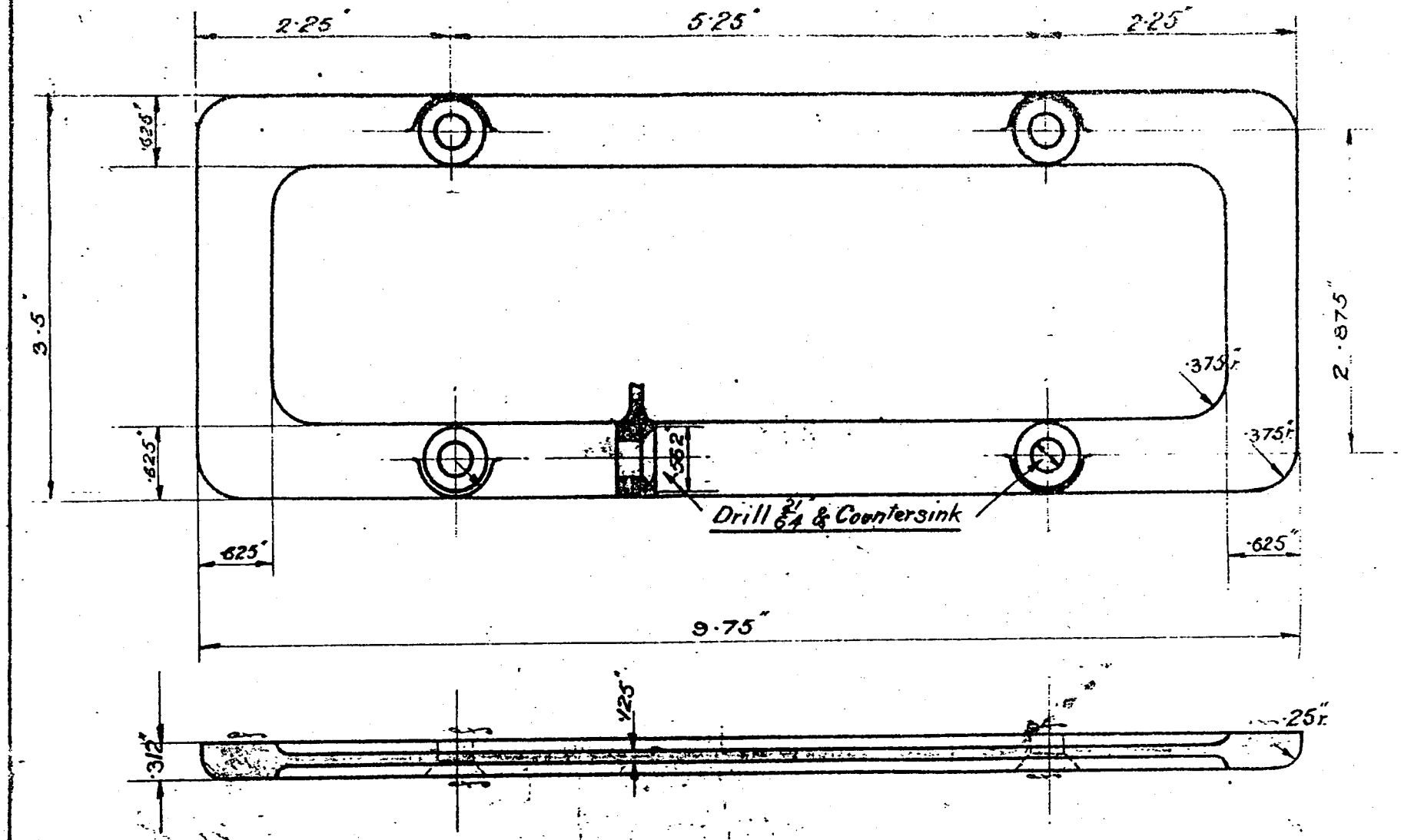

DRAWING Nº. 204—S

MATERIAL. AL. CAST C.

HEAT TREATMENT.

CRANKCASE DOOR FRONT

DRAWN BY	R.L.F.
TRACED BY	R.L.F.
CHECKED BY	
PASSED BY.	
DATE 3·9·18	

L.991

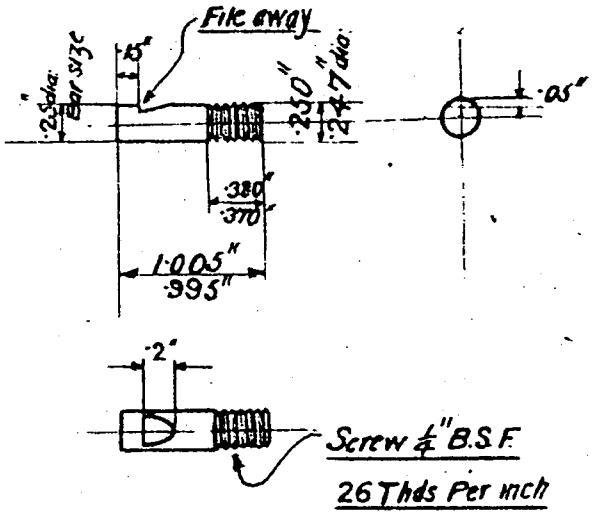

DRAWING No. 205-S

MATERIAL. B.D.S

HEAT TREATMENT

END FOR CARB: SLIDING TUBE

DRAWN BY	S.H.H.
TRACED BY	S.H.H.
CHECKED BY	
PASSED BY	
DATE 30-9-18	

MIIS

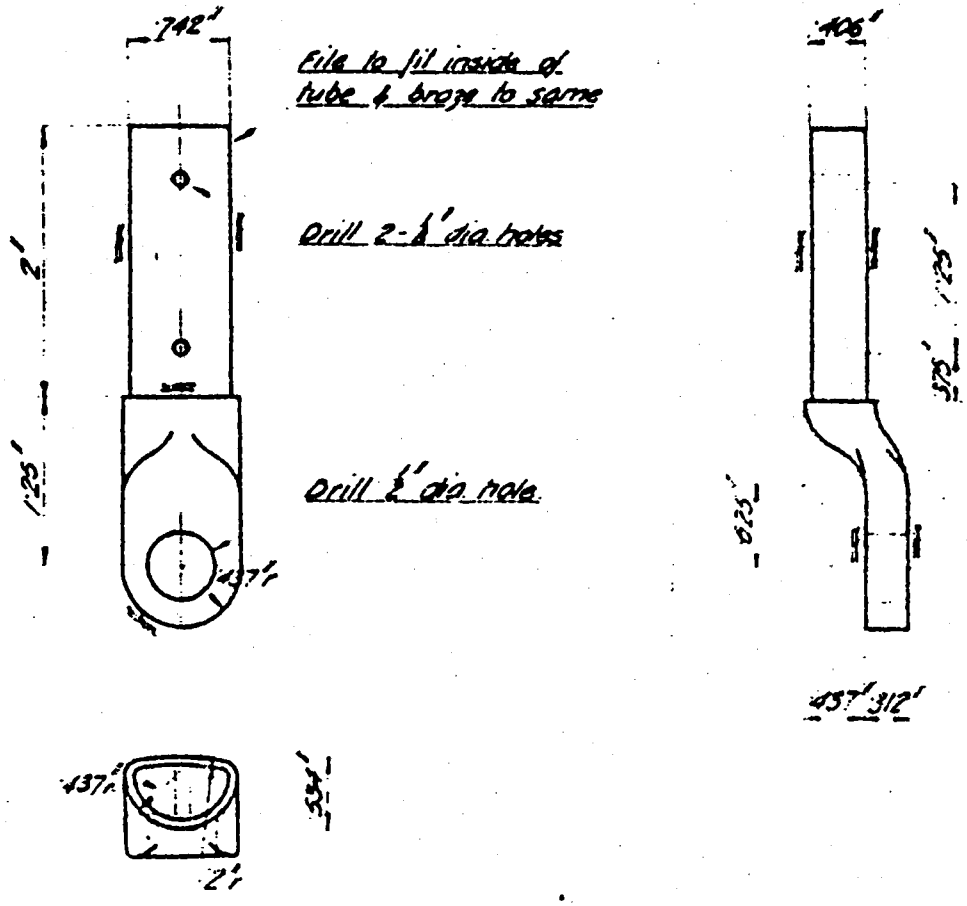

DRAWING No. S7S-S	
MATERIAL. M.S. STPC.20C	ATTACHMENT PLATE FOR N°3 HOOD STICK.
HEAT TREATMENT. NONE	

DRAWN BY	
TRACED BY	
CHECKED BY	
PASSED BY	
DATE 26-3-29	

M39S

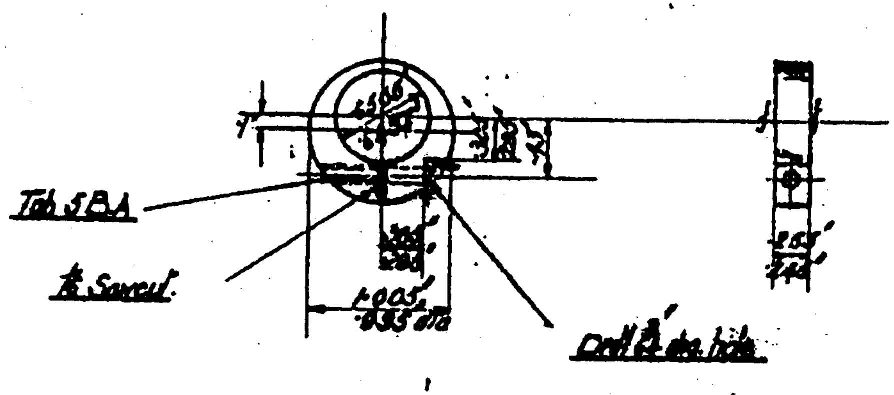

DRAWING No. 983-S

MATERIAL. H.D.B.

HEAT TREATMENT.

STOP COLLAR (VALVE)

DRAWN BY
TRACED BY
CHECKED BY
PASSED BY
DATE

M402

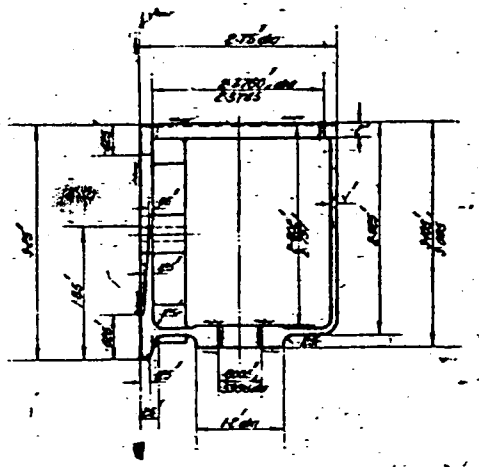

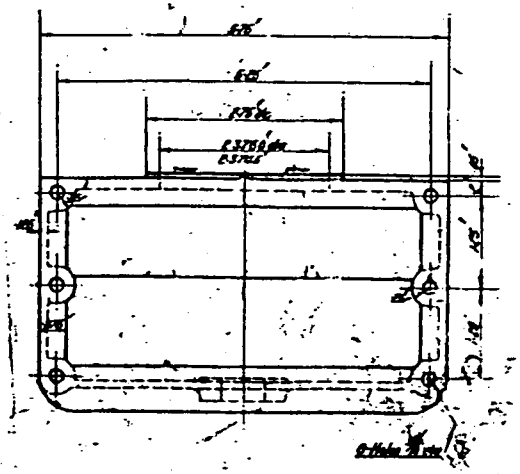

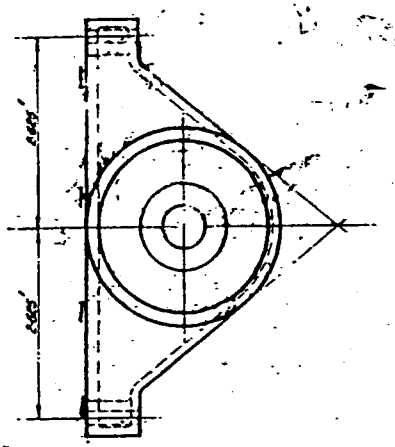

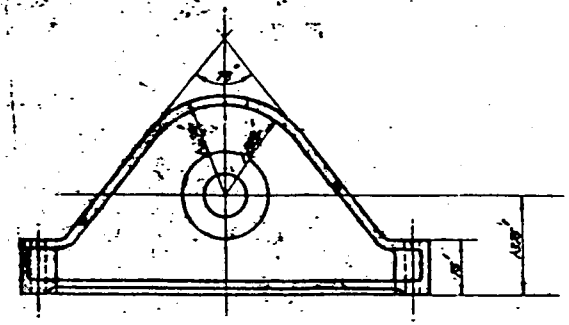

DRAWING NO. 202-2
MATERIAL C.M.
HEAT TREATMENT.

FLOAT CHAMBER

DRAWN BY	
TRACED BY	
CHECKED BY	
PASSED BY	
DATE	

M.423

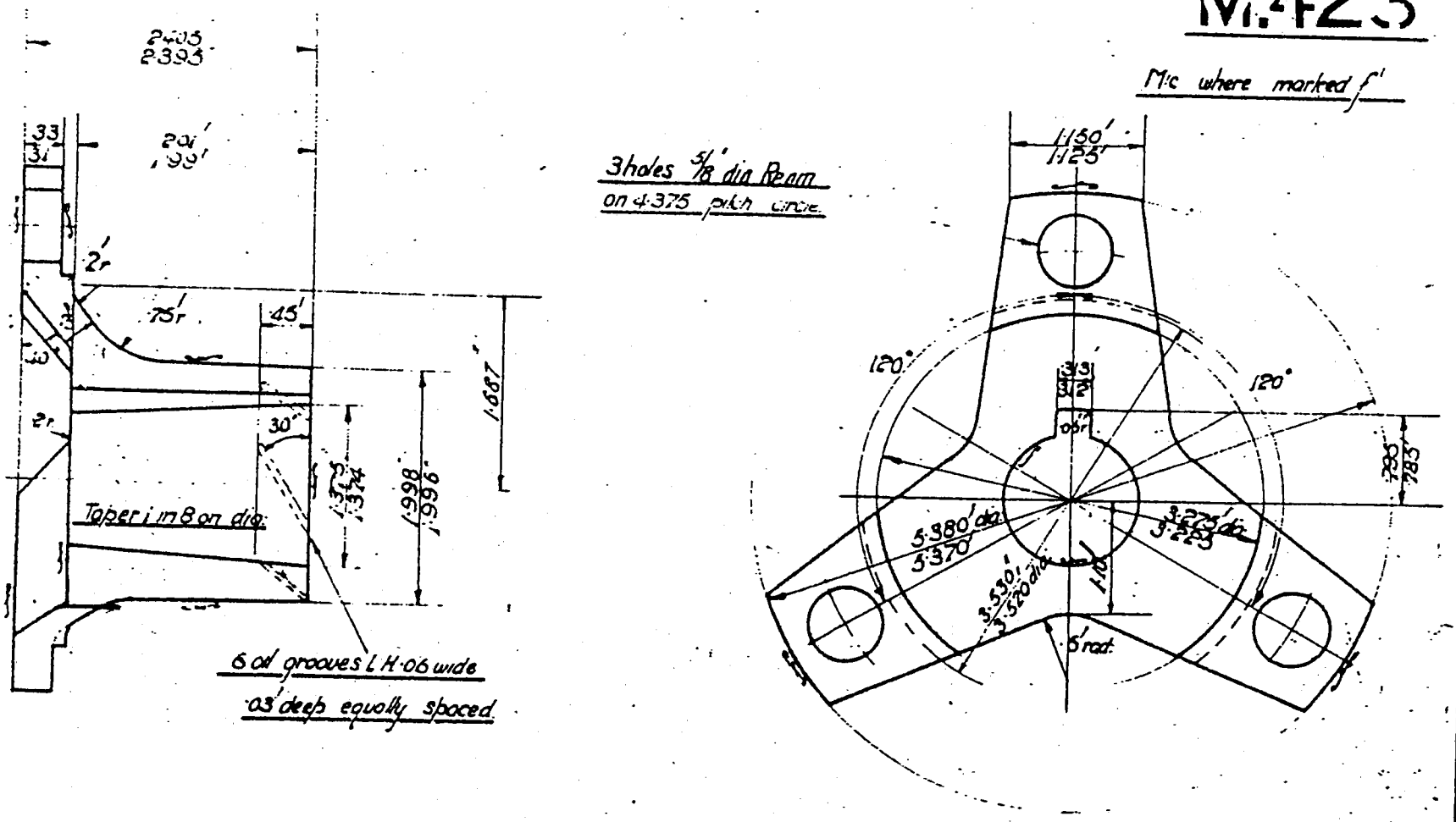

DRAWING No. 102S—S	1st REDUCTION PINION FLANGE.	DRAWN BY	H.B.
MATERIAL H.T.S 40C St pg		TRACED BY	S.S.
HEAT TREATMENT. A2		CHECKED BY	[illegible]
		PASSED BY	
		DATE 22.4.20	

M.424

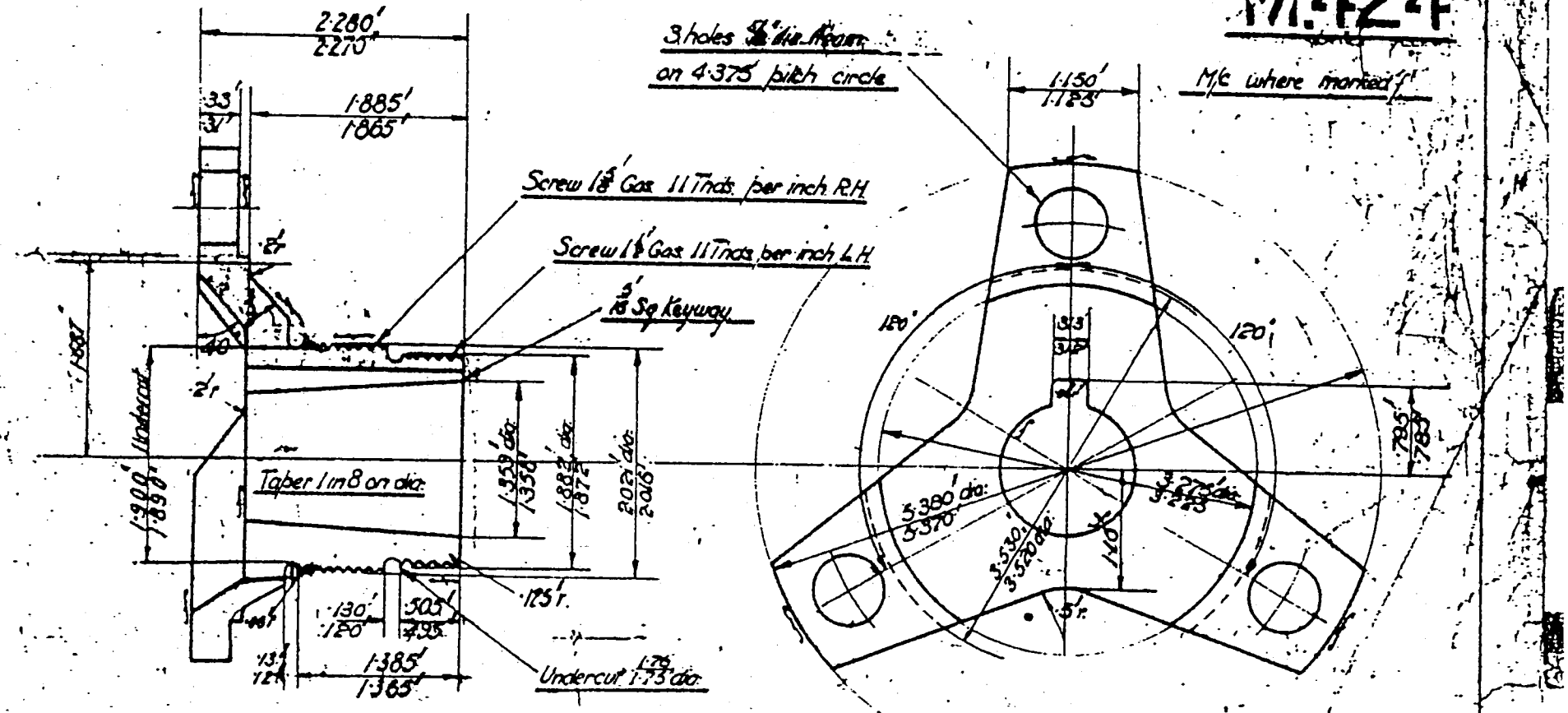

DRAWING No. 1028—S	CLUTCH COUPLING FLANGE.	DRAWN BY	H.B.
MATERIAL H.T.S. 40 C. Stdg.		TRACED BY	S.S.
HEAT TREATMENT A2		CHECKED BY	[illegible]
		PASSED BY	[illegible]
		DATE 28·4·50	

M 696

m/c where marked f

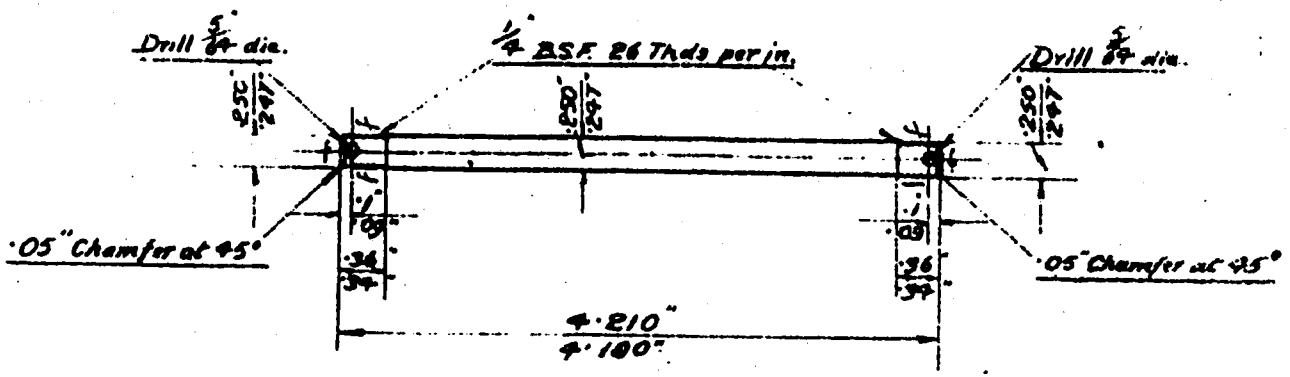

386

STUD FOR ROCKER SPINDLE

MS27

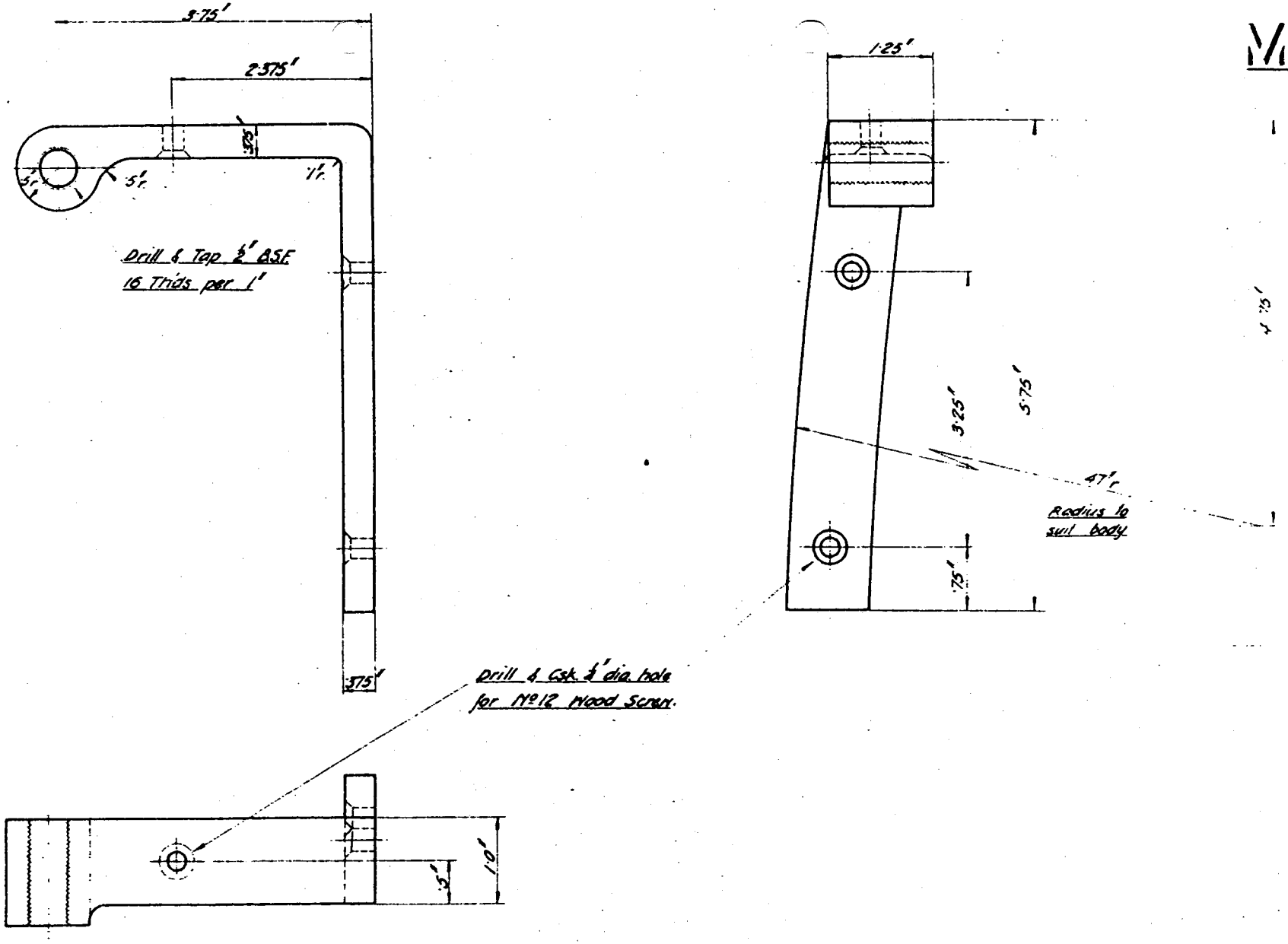

AWING No 100-4	HOOD IRON BRACKET N.S.	DRAWN BY
TERIAL M.S.20C.		TRACED BY
AT TREATMENT NONE.		CHECKED BY
		PASSED BY
		DATE 21-3-[illegible]

MS77

M/c all over

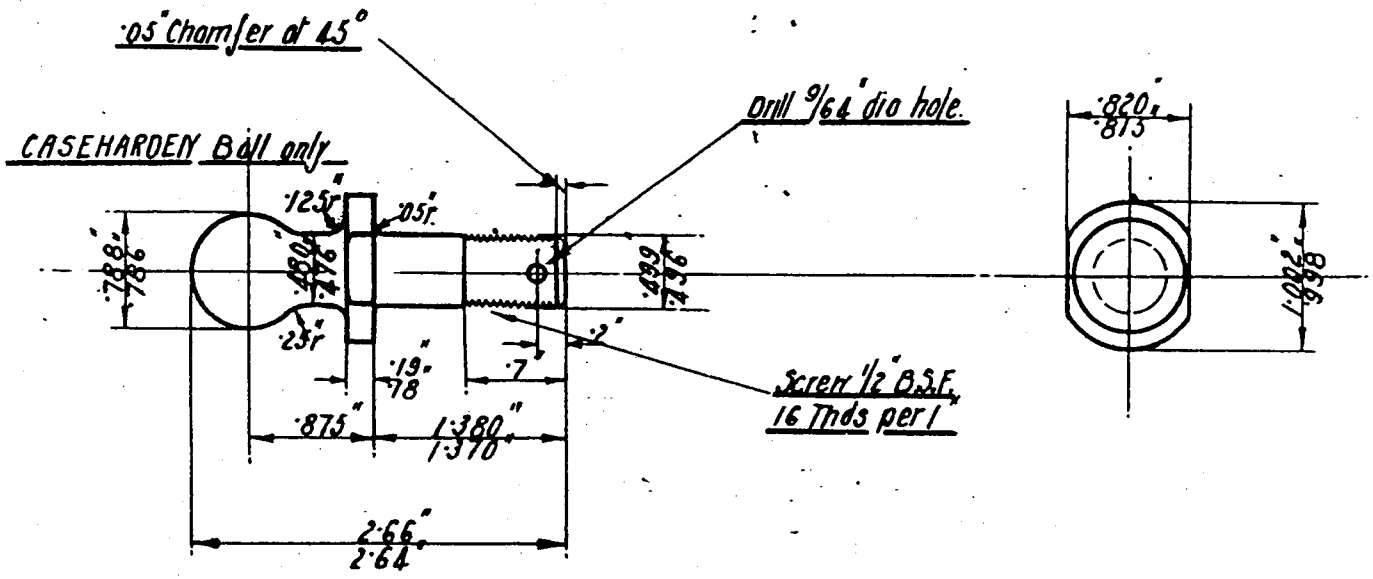

Retraced 20-4-21

DRAWING Nº. 609—S	SHOCK ABSORBER BALL END FRONT
MATERIAL. C.H.M.S. 15% C	
HEAT TREATMENT. D.W.	

DRAWN BY	C.H.S.
TRACED BY	R.W.L.
CHECKED BY	
PASSED BY	
DATE 29-5-19	

COPY
MASTE

MS96

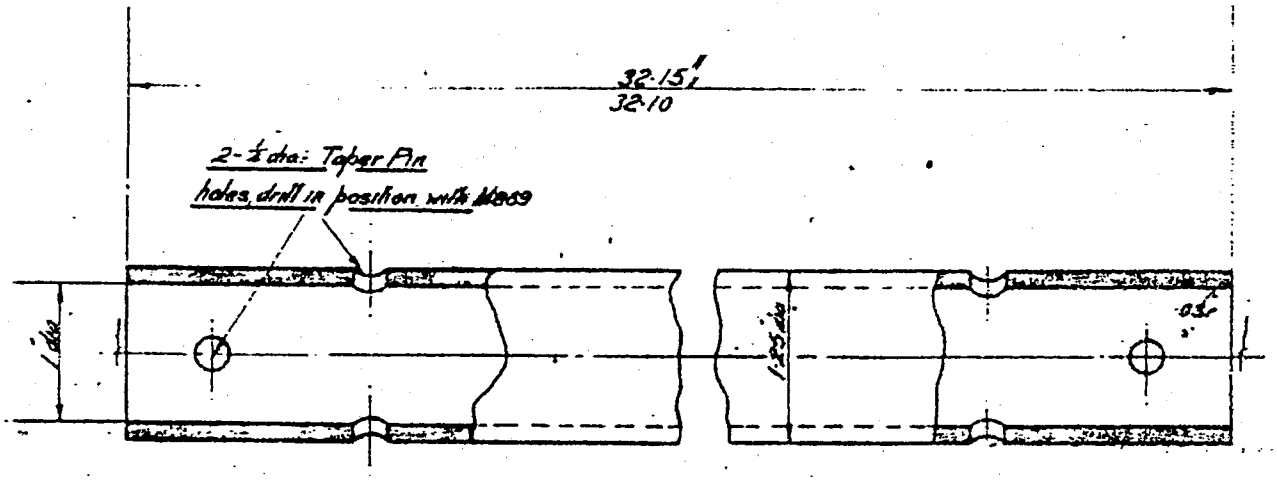

DRAWING Nº. G19-8	SIDE STEERING TUBE	DRAWN BY	[illegible]
MATERIAL. W.S.T.		TRACED BY	[illegible]
HEAT TREATMENT.		CHECKED BY	[illegible]
		PASSED BY	[illegible]
		DATE 24-7-18	

M900

M/c all over.

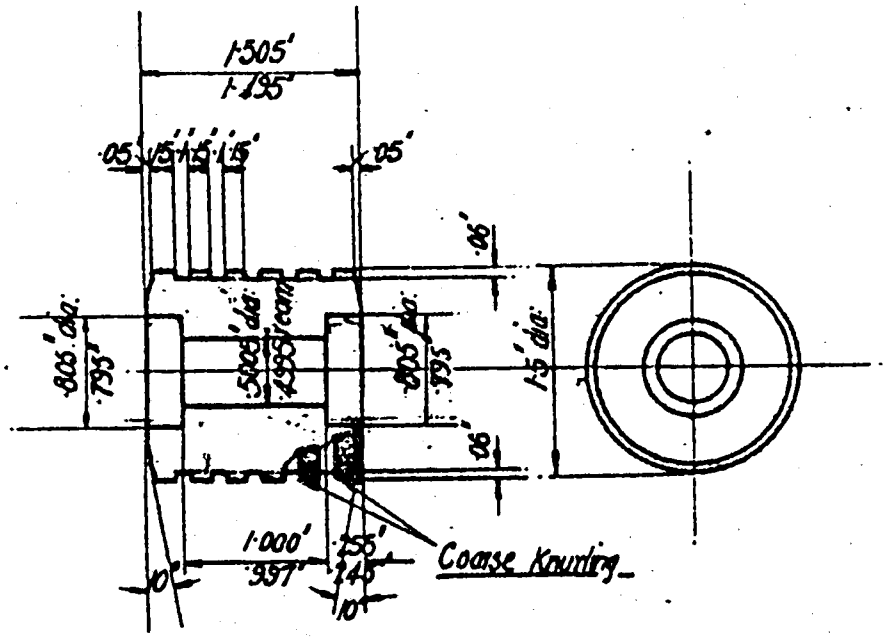

DRAWING No. G22-S	ROLLER FOR ACCELERATOR PEDAL	DRAWN BY A.F.S.
MATERIAL ALUM	FOR	TRACED BY
HEAT TREATMENT.		CHECKED BY
		PASSED BY
		DATE 22-11-13.

M901

M/c all over

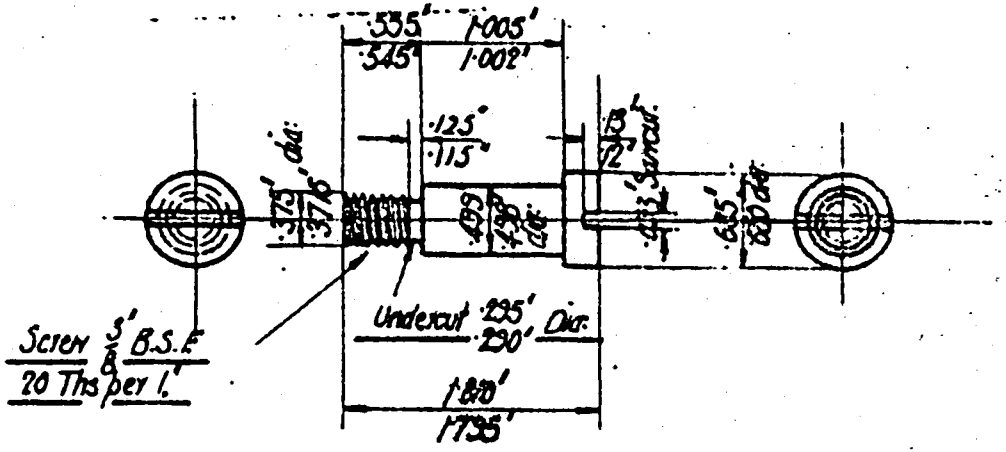

DRAWING No. G22-S	PIN FOR M900	DRAWN BY
MATERIAL BDS 15/C		TRACED BY
HEAT TREATMENT		CHECKED BY
		PASSED BY
		DATE

M982

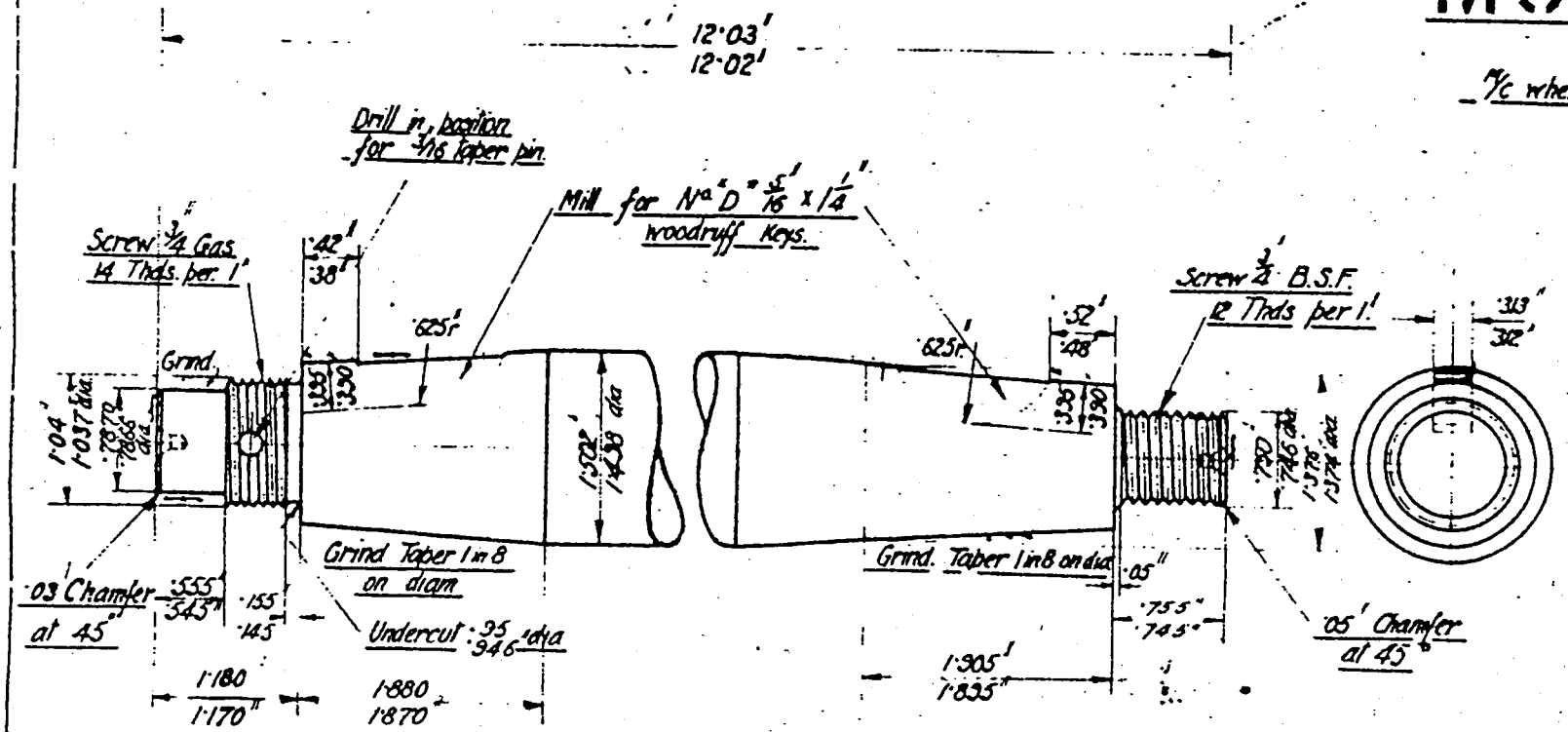

DRAWING No. 901 — S	CLUTCH SHAFT	DRAWN BY	[illegible]
MATERIAL. B.D.H.T.S. ·35% C.		TRACED BY	[illegible]
HEAT TREATMENT.		CHECKED BY	[illegible]
		PASSED BY	[illegible]
		DATE 18-1-20.	

M9S3

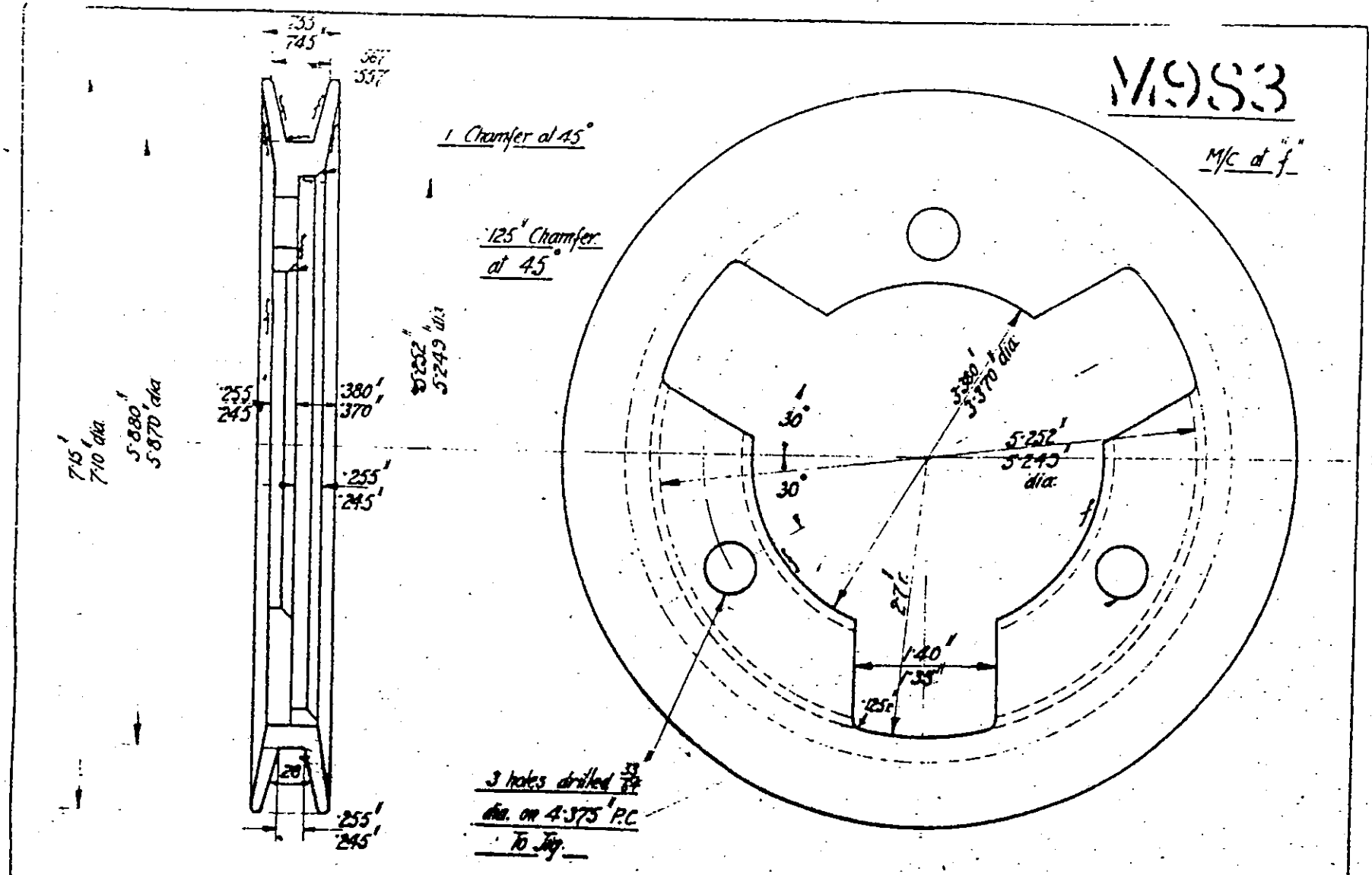

DRAWING No. 901 — S	DYNAMO PULLEY	DRAWN BY MER
MATERIAL. AL. CASTG.		TRACED BY
HEAT · TREATMENT.		CHECKED BY
		PASSED BY
		DATE 22-1-26